CONSTRUCTION SPECIFICATIONS

FOR

MUNICIPAL PUBLIC WORKS IMPROVEMENTS

BISMARCK, NORTH DAKOTA

Prepared by

Bismarck Engineering Department

221 NORTH FIFTH STREET
P.O. BOX 5503
BISMARCK, ND 58506-5503
Gabriel J. Schell, P.E., City Engineer

February 1969
Revised March 2019

This document was originally issued and sealed by
Gabriel J. Schell
Registration Number
PE-6876
On 3/13/19 and the original document
Is stored in the City of Bismarck
Engineering Department

NOTE/DISCLAIMER
The specifications represented in this document are in accordance with established City of Bismarck civil engineering practices and are an electronic facsimile of the specifications on file in the City of Bismarck Engineering Department. However, neither the City of Bismarck nor its employees can or do warranty these specifications to be the complete specifications for any or all City of Bismarck civil construction projects. The specification document, together with all addendums listed in each construction project specifications, shall be the project specifications for the City of Bismarck civil engineering projects.

CONTENTS

SECTION

SECTION 100 – GENERAL PROVISIONS

101 Abbreviations and Definitions

102 Bidding and Contract Documents

103 Scope of Work

104 Control of Work

105 Legal Relationships and Responsibilities

106 Prosecution and Progress

107 Measurement and Payment

SECTION 200 – EARTHWORK

201 Clearing and Grubbing/Miscellaneous Removals

202 Excavation and Embankment

203 Watering

204 Subgrade Preparation

205 Erosion and Sediment Control

SECTION 300 – BASE COURSES

301 Sand Subbase

302 Aggregate Base and Aggregate Surface

303 (Not Used)

304 AC Stabilized Base

SECTION 400 – FLEXIBLE PAVEMENT

401 Asphaltic Concrete Pavement

402 Bituminous Prime or Tack Coat

403 Bituminous Seal

404 Milling Pavement Surface

405 Crack Treatments

406 Asphalt Removal

SECTION 500 – RIGID PAVEMENT

501 Portland Cement Concrete Pavement

502 Slabjacking

503 Controlled Density Fill

SECTION 600 – CONCRETE SIDEWALKS, DRIVEWAYS, CURB AND COMBINED CURB AND GUTTER

601 Concrete Sidewalks

602 Concrete Driveways

603 Concrete Curb and Combined Curb and Gutter

SECTION 700 (BLANK)

SECTION 800 – SEWERS

801 Sanitary Sewer

802 Storm Sewer

SECTION 900 – WATER DISTRIBUTION

901 Watermain

SECTION 1000 – ELECTRICAL

1001 General Specifications for Street Light Construction

SECTION 1100 (BLANK)

SECTION 1200 - MISCELLANEOUS CONSTRUCTION

1201 Topsoil

1202 Seeding

1203 Sodding

1204 Mulching

1205 Manholes and Inlets

1206 Castings and Adjustment

1207 Geosynthetics

1208 Chain-Link Fencing

1209 Sanitary Sewer and Water Main Service Connections

1210 Pavement Marking

1211 Traffic Control

1212 Highway Signs and Posts

STANDARD DETAILS

200-1 Typical Grading Sections

205-1 Concrete Erosion Blanket

205-2 Erosion Control Berm

205-3 Silt Fence

400-1 AC Patch

400-2 Crack Seal

500-1 Concrete Joints

500-2 Full Depth Slab Repair

600-1 Standard Concrete Sidewalk

600-2 Commercial Concrete Sidewalk

600-3 Type 1 and 2 Curb Ramps

600-4	Residential Curb Ramps
600-5	Sidewalk Trench Drain
600-6	Drop Curb Driveway
600-7	Dividing Driveways - (Sheet 1 of 2)
600-8	Dividing Driveways - (Sheet 2 of 2)
600-9	Radius Driveway
600-10	Commercial Driveway
600-11	Mountable Curb and Gutter
600-12	Standard Curb, Curb and Gutter
600-13	(BLANK)
600-14	Mountable Curb and Gutter with Inlet
600-15	Intersection Curve
600-16	Valley Gutter
600-17	Standard Curb and Gutter with Inlet
600-18	Sidewalk & Right-of-Way Grading Detail
801-1	Cleanout Detail
801-2	Sanitary Sewer Pipe Bedding
802-1	Storm Sewer Pipe Bedding
802-2	HDPE to Reinforced Concrete Pipe Connection Detail
802-3	Perforated Pipe In-Line Cleanout
802-4	Perforated Pipe End of Run Cleanout
900-1	Concrete Thrust Blocking
900-2	Water Main Payment Diagram
900-3	Watermain Pipe Bedding

900-4	Hydrant Setting
1001-1	Trench in Conduit
1001-2	Trench Direct Buried
1001-3	Street Crossing in Conduit
1001-4	Crossing in Conduit
1001-5	Crossing Direct Buried
1001-6	Junction Box
1001-7	Pad Mounted Feed Point
1001-8	Pole Mounted Feed Point
1001-9	Feed Point Wiring
1001-10	Feed Point Name Plate
1001-11	Embedded Base
1001-12	Type C, C1, CL & CL1 Base
1001-13	Street Light Type B, B1, L & L1
1001-14	Street Light Type C, C1, CL & CL1
1001-15	Street Light Type D2/DL2
1205-1	Sanitary Sewer Manhole
1205-2	Sanitary Sewer Drop Manhole
1205-3	Storm Sewer Manhole
1205-4	Cast-In-Place Storm Sewer Manhole
1205-5	Type 24-Inch Inlet/Manhole and Type 24-Inch Inlet
1205-6	Type 36-Inch and Type 72-Inch Inlet - (Sheet 1 of 2)
1205-7	Type 36-Inch and Type 72-Inch Inlet - (Sheet 2 of 2)
1205-8	Roof Slab for Type 36-Inch and 72-Inch Inlet with Type 24-Inch Casting
1205-9	Slotted Drain Inlet - (Sheet 1 of 2)
1205-10	Slotted Drain Inlet - (Sheet 2 of 2)

1205-11	Air Release Manhole
1206-1	Manhole, Inlet, and Valve Box Adjustment
1206-2	Manhole, Inlet, and Valve Box Adjustment in Concrete
1206-3	Floating Manhole Casting Detail - (Sheet 1 of 2)
1206-4	Floating Manhole Casting Detail - (Sheet 2 of 2)
1208-1	Chain-Link Fence and Gates
1211-1	Work Zone ADA Compliant Temporary Pedestrian Barricades
1212-1	Road Closed, Type III Barricade, Fence Detail
MISC-1	Temporary Curb Mount Detail

STANDARD FORMS

1401	Construction Contract
1402	Bid Bond
1403	Performance Bond
1404	Payment Bond
1405	Contract Progress Schedule
1406-1	Extra Work Order
1406-2	Extra Work Summary
1406-3	Extra Work - Labor
1406-4	Extra Work - Equipment
1406-5	Extra Work - Materials
1407	NDDOT Fuel Cost Adjustment Clause and Affidavit

SECTION 100

SECTION 101 – ABBREVIATIONS AND DEFINITIONS

101-1 REFERENCES

The specifications rely on many cross-references, both to internal sources in the specifications and external sources in other contract documents, City of Bismarck manuals, and other industry resources. If the contract documents reference an external publication, the City of Bismarck intends that the reference be to the most recent issue, including interim publications before the date of the advertisement, unless the contract specifies otherwise.

Each contract item listed in the contract references a section number from the specifications; therefore, all of the provisions of that referenced section that are relevant to the proper completion of the contract item are binding upon the CONTRACTOR. This includes the requirements found in the “General” subsections as well as those specific requirements listed thereafter.

Within the specifications, references to other sections and subsections of the specifications apply the same as if they were a part of the specification section or subsection from which they were referenced. A cross-reference to a specific subsection of these specifications includes all general requirements of the section of which the subsection is a part.

101-2 ABBREVIATIONS

Wherever the following abbreviations are used in the contract documents, their meaning shall be as follows:

AASHTO	American Association of State Highway and Transportation Officials
AC	Asphaltic Cement
ACI	American Concrete Institute
ACPA	American Concrete Pipe Association
ADA	Americans with Disabilities Act
AGC	Associated General Contractors of America
AIA	American Institute of Architects
AISI	American Iron and Steel Institute
ANLA	American Nursery and Landscaping Association
ANSI	American National Standards Institute
ARTBA	American Road and Transportation Builders Association
ASCE	American Society of Civil Engineers
ASLA	American Society of Landscape Architects
ASTM	ASTM International
ATSSA	American Traffic Safety Services Association
AWPA	American Wood Protection Association

AWWA	American Water Works Association
AWS	American Welding Society
BMP	Best Management Practices
CADD	Computer-Aided Drafting Design
CRSI	Concrete Reinforcing Steel Institute
DBE	Disadvantaged Business Enterprise
EEO	Equal Employment Opportunity
ESAL	Equivalent Single Axle Load
EPA	U.S. Environmental Protection Agency
FAA	Federal Aviation Administration
FHWA	Federal Highway Administration, U.S. Department of Transportation
HDPE	High-Density Polyethylene
IES	Illuminating Engineering Society
ISSA	International Slurry Surfacing Association
ITE	Institute of Transportation Engineers
ITS	Intelligent Transportation System
IMSA	International Municipal Signal Association
LED	Light Emitting Diodes
MUTCD	Manual on Uniform Traffic Control Devices
NCHRP	National Cooperative Highway Research Project
NDCC	North Dakota Century Code
NDDoH	North Dakota Department of Health
NDDOT	North Dakota Department of Transportation
NDPDES	North Dakota Pollutant Discharge Elimination System
NEC	National Electrical Code
NEMA	National Electric Manufacturers Association
NEPA	National Environmental Policy Act
NHTSA	National Highway Traffic Safety Administration
NPCA	National Precast Concrete Association
NRMCA	National Ready-Mix Concrete Association
NTCIP	National Transportation Communications for ITS Protocol
NTPEP	National Transportation Product Evaluation Program
OSHA	Occupational Safety and Health Administration, U.S. Department of Labor
PCA	Portland Cement Association
PCC	Portland Cement Concrete
PCI	Precast/Prestressed Concrete Institute
PVC	Polyvinylchloride - PVC Pipe
QA	Quality Assurance
QC	Quality Control
SAE	SAE International
SG	Specific Gravity
SSPC	The Society for Protective Coatings
SWPPP	Storm Water Pollution Prevention Plan
UL	Underwriters Laboratory, Inc.
USACE	United States Army Corps of Engineers
USFWS	U.S. Fish and Wildlife Service
VMA	Voids in Mineral Aggregate

101-3 DEFINITIONS

Wherever the following terms are used in the contract documents, their meaning shall be as follows:

Act of God. An unforeseeable act, event, or happening resulting from natural causes such as earthquake, tornado, or other cataclysmic phenomena.

Actual Quantity. The quantity of a contract item measured by the ENGINEER.

Addendum. A document issued by the CITY after the advertisement and before the bid opening that modifies or supplements the proposal package and will become part of the contract.

Advertisement for Bids. A public announcement inviting proposals. The advertisement will identify how to get a copy of the proposal package, how to submit a proposal, and the date, time, and place of the bid opening.

Award. The CITY's acceptance of a proposal.

Base Course. The layer or layers of specified or selected material placed on a subbase or subgrade to support a surface course.\

Bid Bond. The security furnished to guarantee the Bidder will enter into the contract if the Proposal is accepted.

Bidder. An individual or legal entity submitting a proposal.

Bid Opening. The public opening of proposals at the date, time, and location identified in the Advertisement.

Bid Item List. A list of the bid items and estimated quantities in the proposal forms. The bid item list becomes the list of contract items after execution of the contract.

Bid Schedule. Bid document which includes all bid items, unit of measurement and estimated quantities.

Bid Unit Price. The price per unit for a contract item submitted by the Bidder on the proposal forms. After award the bid unit price becomes the contract unit price.

Business Day. Any calendar day, except Saturdays and holidays.

Calendar Day. Every day shown on the calendar. A day begins and ends at midnight.

Certificate of Compliance. A certificate provided by the CONTRACTOR to the Engineer.

Change Order. A written order from the CITY to the CONTRACTOR, and signed by both parties, detailing contract revisions for work within the scope of the original contract.

City. The City of Bismarck or its representatives.

> **City Engineer.** The Director of the City of Bismarck Engineering Department acting directly or through authorized representatives.
> **Engineer.** An authorized representative of the City of Bismarck Engineering Department, who is responsible for engineering supervision of construction.

Construction Limits. The area from the beginning station to the ending station of the project and between the slope stakes or as shown on the Plans.

Contract. The written agreement between the CITY and the CONTRACTOR setting forth the obligations of the parties for the performance of the prescribed work.

The contract includes the following:

1. Addenda
2. Bid Item List
3. Change Orders
4. Contract Bond
5. Contract Items (Pay Items)
6. Contract Time
7. Project Plans and Standard Drawings
8. Proposal Forms
9. Proposal Package
10. Advertisement for Bids
11. Standard Specifications
12. Special Provisions
13. Supplemental Agreements
14. Shop Drawings
15. Work Orders

Contract Amount. The total amount of the contract, including all contract revisions to date.

Contract Bond. The security, executed by the CONTRACTOR and the surety or sureties, furnished to the CITY to guarantee complete execution of the contract and all supplemental agreements and the payment of all legal debts pertaining to project construction.

Contract Item (Pay Item). A specific unit of the work for which the contract provides a price. During the bidding process, the term “bid item” may be used to describe these items.

Contract Unit Price. The price included in the contract for a contract item.

Contract Time. The amount of time allowed for completion of the contract, including authorized time extensions. The contract time will be a number of working days, a number of calendar days, a completion date, or a completion date with a minimum number of working days. The contract time may include milestones.

Contractor. The individual or legal entity contracting with the CITY for performance of prescribed work.

> **Employee.** Any person working on the project covered by the contract that is under the direction or control of, or receives compensation from, the CONTRACTOR or a subcontractor.
> **Subcontractor.** An individual or legal entity with whom the CONTRACTOR sublets part of the contract.
> **Superintendent.** The CONTRACTOR's authorized representative in responsible charge of the work.
> **Surety.** The legal entity or individual, other than the CONTRACTOR, executing a proposal guaranty or contract bond.

Employee. See CONTRACTOR.

Engineer. See CITY.

Equipment. All machinery, tools, apparatus, and supplies necessary for maintenance, construction, and completion of the work.

Extra Work. Work not provided for in the contract but considered essential by the ENGINEER for satisfactory completion of the contract within its intended scope.

Final Completion. A project is considered as final complete when all construction, including all punch list items, is fully complete and accepted by the ENGINEER.

Force Account. Payment for contract revisions per approved costs and additives.

Haul Road. Highways, streets, or roads designated by the CITY for use by the CONTRACTOR to haul material to or from the project.

Highway, Street, or Road. A general term indicating a public way used by vehicles and pedestrians. Includes entire area within the right of way.

Holidays. City of Bismarck holidays are as follows:

1. Every Sunday;
2. New Year's Day, January 1;
3. Martin Luther King Jr. Day, the third Monday of January;
4. Presidents' Day, the third Monday of February;

5. Good Friday, the Friday before Easter Sunday;
6. Memorial Day, the last Monday in May;
7. Independence Day, July 4;
8. Labor Day, the first Monday in September;
9. Veterans Day, November 11;
10. Thanksgiving Day, the fourth Thursday in November;
11. Christmas Day, December 25; and
12. Every day appointed as a public holiday by the president of the United States or the Governor of the State

If January 1, July 4, November 11, or December 25 fall on a Sunday, the following Monday is a holiday.

If January 1, July 4, November 11, or December 25 fall on a Saturday, the previous Friday is a holiday.

Materials. Any substances, products, supplies, assemblies, or raw materials specified for use in the performance of the work.

Median. The portion of a divided street separating the traveled ways.

Notice to Bidders. A notice issued by the CITY of projects available for proposals in an upcoming bid opening.

Notice to Proceed. The CITY's notice to the CONTRACTOR to begin the work.

Pavement Structure. The combination of subbase, base course, and surface course placed on a subgrade to support and distribute the traffic load to the roadbed.

Plan Quantity. The quantity of a contract item shown on the bid item list and the Plans.

Plans. The Project Plans and Standard Drawings that show the location, character, and dimensions of the prescribed work, including layouts, profiles, cross sections, and other details.

Project. The specific section of infrastructure on which construction is to be performed under the contract.

Project Number. A number generated by the CITY containing coded project data. Found on the cover sheet of the Plans.

Project Site. All areas used by the CONTRACTOR in the performance of the work.

Proposal. (Commonly referred to as Bid) A Bidder's offer on CITY forms, to perform the work at the prices quoted.

Proposal Forms. The CITY-provided forms on which a Bidder must prepare and submit its Proposal for the work. That portion of the Proposal package containing certifications, affidavits, acknowledgements, and the bid item list. The Proposal form is prepared and submitted by the Bidder and is then considered a Proposal.

Proposal Package. All documents made available to prospective Bidders by the CITY before the opening of Proposals. These documents will become part of the contract.

Request for Proposals. A publication addressing the work required for the project. The request for proposals may include the Special Provisions and the Proposal forms.

Responsive Proposal. A Proposal that meets all requirements of the Proposal package.

Responsible Bidder. A Bidder who has met all of the CITY's prequalification requirements and submits a qualifying bid on a project.

Right-of-Way. A general term denoting land, property, or interest therein, acquired for or devoted to a roadway.

Roadbed. The graded portion of a highway, street or road, within top and side slopes, prepared as a
foundation for the pavement structure.

Shop Drawings. Supplemental design sheets or similar data, such as drawings, diagrams, illustrations, samples, schedules, or calculations, that the contract requires the CONTRACTOR to submit to the ENGINEER. Once the CITY has reviewed a work drawing, it becomes part of the contract.

Sieve. U.S.A. Standard Sieve, as defined in ASTM E11. The specified percent passing for each sieve is measured by weight.

Special Provisions. See Specifications.

Specifications. The compilation of written requirements for performance of the work, including the following:

> **Standard Specifications.** A book of specifications approved for general application and repetitive use.
>
> **Special Provisions.** Revisions or additions to the standard specifications that cover special conditions for the project.

Stabilization. The modification of soils or aggregates by incorporating materials that increase load-bearing capacity, firmness, or resistance to weathering or displacement.

Standard Drawings. An approved set of drawings showing Standard Details of

construction and materials for the work on a project.

Standard Specifications. See Specifications.

Station. When used as a definition or term of measurement, a station is 100 linear feet.

Structures. Bridges, culverts, catch basins, drop inlets, retaining walls, cribbing, manholes, endwalls, buildings, sewers, service pipes, underdrains, foundation drains, and similar features that may be encountered in the work.

Subcontractor. See CONTRACTOR.

Subbase. The layers of specified or selected materials of designated thickness placed on a subgrade to support a base course.

Subgrade. The top surface of an embankment or cut section on a graded roadway. It is the foundation for the subbase, base course, and surface course.

Substantial Completion. A project is substantially complete when it is operational and ready for use by the CITY.

Superintendent. See CONTRACTOR.

Surety. See CONTRACTOR.

Surface Course. One or more layers of a pavement structure designed to accommodate the traffic load, the top layer of which resists skidding and traffic abrasion. The top layer is sometimes called “Wearing Course.”

Traffic. Vehicles, pedestrians, and other modes of transportation.

Total Sum Bid. The total amount of a Proposal; the sum of the price extensions for all bid items.

Work. The providing of all labor, materials, equipment, and incidentals necessary to complete the project in accordance with the contract.

Work Order. A written directive from the ENGINEER to the CONTRACTOR to perform changed work, extra work, or other additional work.

SECTION 102 – BIDDING AND CONTRACT DOCUMENTS

102-1 PROPOSALS

No bids received after the time set for the receipt of the proposals will be considered. The right is reserved to hold all bids for a period of 30 days and to reject any or all bids. Bidders are invited to be present at the opening of Proposals.

102-2 FORM OF PROPOSAL AND SIGNATURE

The Proposal must be made on forms provided for that purpose, or forms provided by the Bidder which follow the same format, enclosed in a sealed envelope, and marked and addressed as required in the Advertisement. It must state the unit prices and the sum of money for which the Bidder proposes to supply the materials and perform the work called for in the Proposal and Schedule of Work. Bidders shall submit a bid on a unit price basis for each item of work so listed in the Proposal. The total of all estimated prices will be determined as the sum of the products of the estimated quantity of each item and the unit price bid for the item. If the bid is made by an individual, it must be signed with the full name of the Bidder whose address must be given. If made by a firm, it must be signed in the co-partnership name by a member of the firm, and the name and address of each member of the firm must be given. If made by a corporation, it must be signed by an officer of the corporation in the corporate name, and the corporate seal must be attached to such signature.

The Bidder may substitute a computer-printed spreadsheet of the Bid Schedule for the CITY-furnished Bid Schedule found in the Proposal. The substitute Schedule shall be attached to the last page of the CITY-furnished Bid Schedule in the Bidder's Proposal.

The following information shall appear on top of each page of the computer-printed Bid Schedule:

1. Improvement District Number or Project Number.

2. Date of Bid Opening.

3. Type and Description of Work (i.e., Sanitary Sewer, Water Main, Storm Sewer, and Incidentals).

4. Page Number.

5. Bidder's Name and Address.

6. Acknowledgement of Addenda.

The substitute Bid Schedule shall be printed on sheets of approximately the same size as the Bid Schedule in the Proposal, and the words and numerals shall be clear and legible. Each page shall be arranged, numbered, and contain the same bid items as the corresponding Bid Schedule in the Proposal. Column headings shall be the same as those in the CITY-furnished Bid Schedule.

Each bid item shall be separated from the bid items above and below by one or more

blank spaces. Solid lines for separating columns and items are not required, but dashed lines may be placed either vertically or horizontally.

The total sum of the bid shall be at the bottom of the last page of the computer-printed Schedule. CONTRACTOR shall initial in ink next to the total sum.

The bidder, or authorized representative, shall sign the substitute Bid Schedule in ink on the last page of the computer printout. The signer's name and title shall be printed below or beside the signature. The person signing the substitute Bid Schedule above shall also sign and complete the Affidavit in the Bidder's Proposal, as regularly required.

In case of discrepancies between item descriptions or quantities in the CITY-furnished Bid Schedule in the Proposal and those in the computer-printed Bid Schedule, the CITY-furnished Bid Schedule in the Proposal will govern. Any omitted items or missed items will be considered as "zero," and no payment will be considered for that item.

102-3 BIDDER'S BOND

Regardless of the amount of the project, each bid shall be accompanied by a Bidder's Bond in the amount of 5 percent of the amount of the bid, meeting the requirements of Section 48-01.1-05 of the North Dakota Century Code, as amended.

102-4 CONTRACT BOND

The Performance and Payment Bond required in Section 104 shall not be included as a separate item, but shall be incidental to the project.

102-5 CONTRACTOR'S INSURANCE

The CONTRACTOR shall not commence work under the contract until a "Certificate of Insurance" has been obtained and submitted to the CITY for all insurance required under this section and proof of such insurance has been delivered to the CITY, nor shall the CONTRACTOR allow any Subcontractor to commence on any subcontract until all similar insurance required of the Subcontractor has been obtained and proof has been delivered to the CITY.

(a) Compensation Insurance. The CONTRACTOR shall take out, and maintain during the life of the contract, Workers Compensation Insurance for all of CONTRACTOR's employees employed at the site of the project. In case any work is sublet, the CONTRACTOR shall require the Subcontractor similarly to provide Workers Compensation Insurance for all of the latter's employees unless such employees are covered by the protection afforded by the CONTRACTOR. In the case of employees engaged in hazardous work under the contract, at the site of the project, who are not protected under the Workers Compensation statute, the CONTRACTOR shall provide and shall cause each subcontractor to provide Employer's Liability Insurance for the protection of its employees not otherwise protected.

(b) Public Liability and Property Damage Insurance. The CONTRACTOR shall take out, and maintain during the life of the contract, such Public Liability and Property Damage Insurance as shall protect it, the CITY, and any Subcontractor performing work covered by the contract, for claims and damages for personal injury including accidental death and including the coverage for "Assault and Battery" as well as from claims for property damage (including damage to CITY's property), which may arise from operations under the contract, whether such operations by itself or any Subcontractor or by anyone directly employed by either of them to, from, or on the site and the amounts of such insurance shall be as follows:
Public Liability Insurance in an amount not less than $1,000,000.00 for personal injuries, etc., including accidental death to any person, in an amount not less than $2,000,000.00 on account of one accident and Property Damage Insurance not less than $1,000,000.00. Where excavation, trenching, or tunneling is involved, the Property Damage Liability Coverage under the Comprehensive General Liability Policy shall specifically provide coverage for damage to underground property. The CITY OF BISMARCK shall be named as an additional insured on all the policies required under this section.

(c) Satisfactory Coverage. In the event the form of any policy or certificates or the amount of the insurance or the companies writing same are not satisfactory to the CITY, the CONTRACTOR shall obtain new policies or certificates in compliance with these Specifications. The CONTRACTOR shall not cause any policies to be canceled or to permit them to lapse, and all insurance policies shall include a clause to the effect that the policy shall not be canceled or changed until 30 days after the CITY has received written notice as evidenced by the return receipt of the registered letter.

(d) Proof of Insurance. "Certificates of Insurance" shall contain true transcripts from the policy, authenticated by the proper officer of the insurer, evidencing in particular those insured, the extent of the insurance, the locations and operations to which the insurance applies, the effective date and expiration date, and the notice of cancellation clause mentioned herein above.

(e) Builder's Risk Insurance. The CONTRACTOR will maintain Builder's Risk Insurance or like insurance coverage (fire and extended coverage) on a 100 percent completed value basis on the insurable portion of the project for the benefit of the CITY, the CONTRACTOR, and all Subcontractors, as their interest may appear.

102-6 DEBARMENT CERTIFICATION

As required by Bismarck City Ordinance, all suppliers, contractors, and service providers doing business with the CITY must certify that they are in compliance with all federal, state, and local laws, regulations, and orders including, but not limited to, those regarding non-discrimination, wages and hours, Workers Compensation, and immigration. Failure of compliance may result in the cancellation of any CITY contract and exclusion from consideration for future contracts.

By submission of a bid or proposal, the bidder or proposer certifies, to the best of its knowledge and belief, that it and its principals:

(a) Are not presently debarred, suspended, proposed for debarment, declared ineligible, or voluntarily excluded from covered transactions by any federal department or agency;

(b) Have not, within a 3-year period preceding this certification, been convicted of or had a civil judgment rendered against them for commission of fraud or a criminal offense including, but not limited to, a violation of federal or state antitrust statutes, or commission of embezzlement, theft, forgery, bribery, falsification or destruction of records, making false statements, immigration violations, or receiving stolen property in connection with obtaining, attempting to obtain, or performing a public (federal, state, or local) contract;

(c) Are not presently indicted for or otherwise criminally or civilly charge by a governmental entity (federal, state, or local) with commission of any of the offenses listed in subparagraph (b) of this certification; and

(d) Have not within a three (3) year period preceding this certification had one or more public contracts (federal, state, or local) terminated for cause or default.

The bidder or proposer also certifies that if it later becomes aware of any information contradicting the statements above, it will provide that information to the CITY.

If the bidder or proposer is unable to certify to all statements in this certification, it shall indicate so in its bid or proposal or in a transmittal letter or message accompanying its bid or proposal and provide a written explanation to the CITY.

102-7 LOCAL CONDITIONS

Bidders shall satisfy themselves as to the nature of the material to be handled and the local site conditions affecting the work, and if conditions are found to be different than anticipated by the CONTRACTOR subsequent to the signing of the contract, it shall not in any way relieve the CONTRACTOR from its obligation or any risks from the fulfillment of all the work and terms of the contract.

102-8 INDEMNITY AGREEMENT FOR CONTRACTORS

The CONTRACTOR agrees to indemnify and hold harmless the CITY OF BISMARCK, its appointed and elective officers and employees, from and against any and all loss or expense, including attorney's fees and costs by reason of liability imposed by law upon the CITY, its elected or appointed officials or employees, for damages because of bodily injury including death at any time resulting therefrom sustained by any person or persons and on account of damage to property including loss of use thereof, arising out of or in consequence of the performance of this work, whether such injuries to persons or damage to property is due to the negligence of the CONTRACTOR, its agents or

employees, its subcontractors, their employees, CITY OF BISMARCK, its appointed or elected officers, employees, or their agents, except only such injury or damage as shall have been occasioned by the sole negligence of the CITY, its appointed or elected officials or employees.

102-9 REQUEST FOR ALTERNATE SPECIFICATIONS

The reference to manufacturer's name and catalog or model numbers shall be interpreted as establishing a standard of quality, not as limiting competition.

CONTRACTORS wishing to price material or equipment not referenced in Specifications or on Drawings shall apply in writing to the CITY ENGINEER to have the material or equipment recognized as an approved equivalent. The CONTRACTOR must include complete descriptive technical data on the proposed item consisting of: model numbers, type, size, and performance characteristics. Procedure also applies to requests by suppliers.
The request for consideration of an approved equivalent must be provided to the CITY ENGINEER no later than 10 days prior to bid opening. All equivalents approved for bid may be listed in addenda sent to all plan holders in advance of bid opening.

CONTRACTORS choosing to use material or equipment other than those shown on Drawings or specified in detail, but approved for bid, shall be responsible for physical dimensions and coordination. The CITY OF BISMARCK will not be responsible for costs of necessary changes and additional work required by the CONTRACTOR or any other trades arising from such use.

If the alternate is deemed unacceptable to the ENGINEER, the bidder may request, in writing, that the matter be scheduled for consideration by the Board of City Commissioners. Such request must be made to the City Administrator no later than 7 days prior to the Board of City Commissioners meeting set for the award date. Requests for consideration by the Board of City Commissioners after that date shall not be honored.

102-10 AWARD AND CONTRACT SECURITY

The bidder to whom the award is made will be required to enter into a written contract with the CITY OF BISMARCK as required by Section 48-01.1-05 of the North Dakota Century Code. Pursuant to NDCC Section 48-02-06.2, simultaneously with the CONTRACTOR's delivery of the executed contract, the CONTRACTOR shall furnish a Performance Bond in an amount not less than 100 percent of the total contract amount as security for the faithful performance of the contract and also a Payment Bond in an amount not less than 100 percent of the total contract amount as security for the payment of all persons performing labor on the project under the contract and furnishing materials in connection with the contract.

After the proposals are opened and read, the products of the quantities and the respective unit prices bid and the summation of said products in each Proposal will be

verified or corrected. In case of discrepancy, the bidder's apparent intent indicated shall govern. Discrepancies between the multiplication of units of work and unit prices will be resolved in favor of the unit prices. Discrepancies between the indicated sum of any column of figures and the correct sum thereof will be resolved in favor of the correct sum. Discrepancies between words and figures will be resolved in favor of the words. However, if the bidder's intent is not apparent, the Proposal will be rejected. The verified or corrected totals of the Proposals considered will be compared and the results of such comparison made public. Until the award of the contract, however, the right will be reserved to reject any and all proposals and to waive technicalities as may be deemed best for the interests of the CITY. All quantities are estimated and shall be equal per each item for comparison of bids per each unit of area. Addenda quantities shall govern over bid Proposal quantities which shall govern over Plan quantities.

The award of the contract, if made, will be to the lowest responsible bidder whose Proposal complies with all the requirements specified. The award, if made, will be made within the time specified in the Advertisement for Bids unless an extension of this limit is agreed to in writing by both parties. In the case of participation in the project by federal and/or state government, or any agency, subdivision, or other participating party, or if concurrence of the aforementioned parties is required by law, any award made by the Board of City Commissioners shall be deemed subject to concurrence of the participating and/or regulatory parties.

If the project includes more than one unit or contains alternates, the basis of award shall be the lowest and best bid for the units or alternates selected by the CITY. Units or alternates not selected shall not be included in forming the basis of determining the lowest bid. Bidders shall be aware that there is no guarantee that all units or alternates will be awarded and balance their bids accordingly.

Prior to the CITY execution of the contract, the successful (or apparent low) bidder shall submit to the CITY ENGINEER a schedule of proposed progress showing the proposed starting and completion dates and with curves showing the percentage of the major features of the work scheduled for completion at any date together with a composite curve showing the percentage of the entire contract which will be completed at any date. See Standard Form Number 1405-01 for a typical "Contract Progress Schedule." The CONTRACTOR may elect to use an approved substantially similar form.

The proposed Progress Schedule shall show the starting date and the number of working days deemed necessary by the CONTRACTOR to complete the work on or before the completion date shown in the Proposal.

The number of working days shown on the Progress Schedule shall not exceed the number of calendar days, excluding Sundays and holidays, between the proposed starting date and the completion date shown in the Proposal.

After the proposed Progress Schedule, Payment and Performance Bonds, Certificate of Insurance, and any other required documents have been submitted to the CITY ENGINEER, they will be reviewed and forwarded to the CITY ATTORNEY with a

recommendation to execute the contract. By entering into a contract, the CONTRACTOR represents that it has carefully reviewed the Plans, Specifications, and General and Special Provisions and has inspected the site conditions and that it has the capability to complete a good and workmanlike project in conformance with the Plans, Specifications, and General and Special Provisions.

As provided by North Dakota statutes, no contract will be awarded to any CONTRACTOR who is not the holder of a current license in the class within which the value of the project falls. A foreign corporation must have a Certificate of Authority to do business in North Dakota before a contract can be awarded to said corporation.

The CITY OF BISMARCK reserves the right to cancel the award of any contract at any time before the execution of said contract by all parties without any liability against the CITY.

All bidders' bonds, except in case of defaults, will be returned, upon request, within a reasonable time and as provided by law.

All bidders should note that after the award of the contract to the lowest bidder is approved by the Board of City Commissioners, and the contract is fully executed, ALL bid documents submitted to the CITY will be destroyed utilizing standard office practices, with the exception of the bid of the successful bidder. Should a non-successful bidder want its bid documents returned, it should include a self-addressed, postage-paid envelope with the bid, or request that the bid documents be saved in a self-addressed envelope included with the bid to be picked up at the Engineering Department upon the signature of the bidder.

SECTION 103 – SCOPE OF WORK

103-1 SUBCONTRACTING

All work performed under the contract shall be by the company or firm to which the contract is awarded, and no portion of the work shall be awarded to a subcontractor unless authorized in writing by the ENGINEER acting on the approval of the Board of City Commissioners. The CONTRACTOR shall be responsible for the coordination and control of the subcontractor(s).

103-2 MOBILIZATION

This work consists of preparatory work and operations, including movement of personnel, equipment, and supplies and establishment of offices, contractor's buildings, and facilities necessary for work on the project. This work and all other work and operations which must be performed along with all costs incurred before the beginning work on the project site shall be incidental to the project.

103-3 CHANGES

The Board of City Commissioners reserves the right to make any changes in the alignment, grade, or design as may be deemed advisable, and should any changes so made cause the CONTRACTOR extra expense or operate to decrease CONTRACTOR's expense, the ENGINEER shall make due allowance, as agreed upon by ENGINEER and CONTRACTOR, which action shall be binding upon both parties. The CONTRACTOR with whom the contract for the execution of the work is made will be required to make any extension which the Board of City Commissioners may require. The extensions shall be constructed at the same unit price for the same class of work as bid upon for this work, provided that should the prices of materials be increased or diminished over the prices of the same materials at the present time for the same class of work, the ENGINEER shall make due allowance. The action shall be binding upon both parties and provided further that such extensions shall be ordered prior to the completion of the contract.

103-4 PATENTS

The CONTRACTOR will be held responsible and be required to make good at the CONTRACTOR's expense any and all damages and suits for damages caused by infringements of the patent rights on devices or equipment for the requirements of the contract and is to indemnify and hold harmless the CITY OF BISMARCK from all claims, damages, or expenses by the use thereof. All fees and royalties covering the same are to be included in the price bid by the CONTRACTOR for the work to be done under the Specifications.

103-5 TRAFFIC CONTROL DEVICES

The CONTRACTOR is expected to be familiar with all federal, state, and local laws, codes, ordinances, and regulations which in any manner affect those engaged in the work or the materials or equipment used in or upon the site or in any way affect the conduct of the work. No pleas of misunderstanding or ignorance on the part of the CONTRACTOR will in any way serve to modify the provisions of the contract. The CONTRACTOR shall provide and maintain on a twenty-four (24) hour basis all necessary safeguards and traffic control devices at its own expense.

The CITY OF BISMARCK has adopted the U.S. Department of Transportation Manual on Uniform Traffic Control Devices, 2009 Edition, or latest Edition, and all revisions, for all traffic control devices and their placement. For all materials and equipment used for traffic control on all construction projects in the CITY OF BISMARCK, the CONTRACTOR shall comply with Section 704 of the Standard Specifications for Road and Bridge Construction and the Design Standard Drawings of the North Dakota Department of Transportation. The documents referred to above are available at the City of Bismarck Engineering Department.

When detours for roadway closures are not incorporated within the Plans or are required because of an emergency situation, water main break, sewer collapse, etc., the CONTRACTOR shall submit a traffic control plan to the ENGINEER for review and approval.

SECTION 104 – CONTROL OF WORK

104-1 ENGINEER

The ENGINEER is the authority on the engineering details of the project and the administrative responsibilities for the satisfactory completion of the project. The ENGINEER will give the grades and locations for all work, and no work depending upon such grades or locations shall be commenced until after the same have been established. Upon all questions concerning the interpretations of these Specifications or the plans, the decision of the ENGINEER shall be binding upon both parties. Detailed Plans of all work not completely shown on the Plans now on file will be furnished by the ENGINEER from time to time, and the work shall be executed in accordance with such detailed plans.

The ENGINEER has authority to reject defective material or work that does not meet the contract requirements. The ENGINEER has the authority to suspend the work for the following reasons:

A. The CONTRACTOR fails to carry out contract requirements;
B. The CONTRACTOR fails to carry out orders from the ENGINEER;
C. During periods of unsuitable weather;
D. For conditions considered unsuitable for performance of the work;
E. For other conditions or reasons in the public interest; or
F. For other reasons the ENGINEER and CONTRACTOR mutually agree on.

104-2 CONTRACTOR

The foreman of the CONTRACTOR in charge of the work will be held to represent the CONTRACTOR during the absence of the latter or CONTRACTOR's legal representative. Instructions given to the CONTRACTOR's foreman on the work by the ENGINEER will be held as having been given to the CONTRACTOR.

104-3 CHARACTER OF WORKMEN

If any person employed on the project, whether a CONTRACTOR’S employee or not, is intemperate, prejudiced, abusive, or disorderly, the ENGINEER may direct the CONTRACTOR in writing to discharge the person from the work. Re-employ this person on the project only with the ENGINEER’S approval. If the CONTRACTOR fails to remove a person as directed by the ENGINEER or to provide sufficient personnel for the proper execution of the work, the ENGINEER may suspend the work by written notice until the CONTRACTOR complies.

104-4 METHODS AND APPLIANCES

The methods and appliances adopted by the CONTRACTOR shall be such as will enable the CONTRACTOR to secure a satisfactory quality of work and complete the work within the time specified. The choice of methods and appliances to complete the

work in compliance with the Plans and Specifications is solely the CONTRACTOR's. It is the responsibility and obligation to produce a complete project that fully complies with the Plans and Specifications and is of satisfactory quality. The ENGINEER may at any time inform the CONTRACTOR of apparent deficiencies in the work, and the CONTRACTOR will make whatever adjustments are, in the CONTRACTOR's judgment, necessary to bring the work back into conformance. Failure of the ENGINEER to so advise the CONTRACTOR shall not in any way relieve the CONTRACTOR from its obligations which shall remain in full force and effect until the discharge of the contract. The Board of City Commissioners of the CITY OF BISMARCK reserves the right, in case of improper construction, to suspend the work at any time and to reject the work or to order the reconstruction of any part or all of the work improperly done.

104-5 MONUMENTS, BENCH MARKS, WITNESS AND GRADE STAKES

All monuments, bench marks, and witness and grade stakes are the property of the CITY, and in the event of the destruction or removal by the CONTRACTOR, such stakes shall be replaced by the ENGINEER at the CONTRACTOR's expense. Any interruption of work and/or costs incurred by the CONTRACTOR due to any delays caused during the replacement of destroyed monuments, bench marks, and witness and grade stakes shall be borne by the CONTRACTOR. The CONTRACTOR shall be responsible for notifying the ENGINEER a minimum of 72 hours prior to the expected survey.

104-6 CONTRACTOR’S RESPONSIBILITIES

Unless otherwise specified, the CONTRACTOR shall furnish all labor, materials, and equipment necessary for the completion of the Schedule of Work in accordance with the Plans and Specifications. The CONTRACTOR shall do all necessary hauling and perform all labor, incidental thereto, for which no express provisions have been made. The CONTRACTOR shall assume all risks or damages to persons or property prior to the final acceptance of the work. The CONTRACTOR shall so conduct its operation as not to interfere with the work of other contractors in the vicinity. The CONTRACTOR shall maintain at all times an efficiently sized crew headed by a competent construction foreman and the necessary skilled labor to efficiently complete the work.

The CONTRACTOR shall be responsible for maintenance and operation of all constructed facilities until final acceptance unless otherwise noted in Specifications, notes, or Special Provisions. This includes locating of CONTRACTOR-constructed underground facilities.

104-7 SHOP DRAWINGS

Before any of the materials are delivered to the job, the CONTRACTOR shall submit to the CITY ENGINEER complete Shop Drawings.

The Shop Drawing submittal shall include 2 copies in paper format or 1 electronic copy in PDF format. An approved electronic copy will be sent to the contractor upon

approval, paper format of approved drawings will not be provided unless requested by the CONTRACTOR.

Shop Drawings shall be submitted for all types of supplied materials including water, sanitary sewer, storm sewer, and electrical. The Shop Drawings shall include catalog numbers, performance data, dimensions, and other descriptive information.

Paper format Shop Drawings may be in the form of printed catalog sheets showing all necessary information and shall be bound together, neatly indexed, and tabbed.

Each Shop Drawing folder or set of drawings shall be stamped, initialed, and dated, electronically or on hard copy, by CONTRACTOR to indicate it has thoroughly reviewed them.

The CITY review of Shop Drawings is for general compliance with contract documents. The CITY review does not relieve the CONTRACTOR from responsibility for errors, omissions, or deviations from CONTRACTOR requirements.

Shop Drawings not in conformance with the Specifications may be returned to the CONTRACTOR without review.

104-8 CONFORMITY WITH PLANS & SPECIFICATIONS

Unless specific tolerances are specified, all work performed and all materials furnished shall be in reasonably close conformity with the lines, grades, cross sections, dimensions, and material requirements shown on the Plans or indicated in the Specifications.

Plan dimensions and contract specification values are to be considered as the target value from which any deviations are allowed. It is the intent of the Specifications that the materials and workmanship shall be uniform in character and shall conform as nearly as realistically possible to the prescribed target value or to the middle portion of the tolerance range. The purpose of the tolerance range is to accommodate occasional minor variations from the median zone that are unavoidable for practical reasons. When a maximum or minimum value is specified, the production and processing of the material and the performance of the work shall be so controlled that the material or work will not be preponderantly of borderline quality or dimension.

In the event the ENGINEER finds the materials or the finished product in which the materials are used are not within reasonably close conformity with the Plans and Specifications but that reasonably acceptable work has been produced, the ENGINEER will then make a determination if the work will be accepted and remain in place. In this event, the ENGINEER will document the basis of acceptance by contract modification which will provide for an appropriate adjustment in the contract price for such work or materials as the ENGINEER deems necessary to conform to a determination based upon engineering judgment.

In the event the ENGINEER finds the materials or the finished product in which the materials are used or the work performed are not in reasonably close conformity with the Plans and Specifications and have resulted in an inferior or unsatisfactory product, the work or materials shall be removed and replaced or otherwise corrected by and at the expense of the CONTRACTOR.

104-9 DELAYS

The CONTRACTOR will not be entitled to any compensation for foreseeable or unforeseeable causes resulting in delays or hindrances to the work. Extensions of time will be granted for unavoidable delays, which in the opinion of the ENGINEER are clearly beyond the control of the CONTRACTOR and outside of normal occurrences including, but not restricted to, acts of God or of the public enemy, acts of the CITY, acts of another CONTRACTOR in the performance of a contract with the CITY, fires, epidemics, quarantine restrictions, strikes, freight embargoes, and abnormal weather. The ENGINEER must receive a written request for time extension from the CONTRACTOR not more than 20 days after commencement of delay before any time extension will be considered. Requests made beyond the 20-day limit will be cause for denial. Any extension of time will not relieve the CONTRACTOR or its sureties from their obligations which shall remain in full force and effect until the satisfactory discharge of the contract.

104-10 MULTIPLE CONTRACTS ON SAME SITE

When different types of construction work on the same section of public right-of-way or site are let under separate contracts, the CONTRACTORS shall cooperate with each other to the fullest extent possible that the prosecution of the work under each contract will be carried out for the best interests of the CITY. The CITY assumes no liability for any delay caused by any CONTRACTOR, its subcontractor(s) or supplier(s), to any other CONTRACTOR, its subcontractor(s) or supplier(s).

104-11 COOPERATION BETWEEN CONTRACTORS

The CITY reserves the right to contract for and perform other work on or near the site of work and coordinate the work and cooperate with the CONTRACTOR for the other work. The CONTRACTOR is responsible for all liability, financial or otherwise, in connection with the contract, and shall hold the CITY harmless from damages or claims resulting from inconvenience, delay, or loss due to the CONTRACTOR's failure to coordinate the work or cooperate with the CONTRACTOR for the other work. If a conflict occurs between the CONTRACTOR for the other work, the ENGINEER will provide direction.

104-12 TRANSPORTATION OF MATERIALS

The CONTRACTOR is authorized to ship all construction materials which are to be incorporated into the project to the CITY OF BISMARCK in care of the CONTRACTOR. Such materials are exempt from the federal tax on transportation of said materials. The

exemption of federal tax does not apply to shipments of fuel, lubricants, spare parts, and items of construction equipment belonging to the CONTRACTOR and which will not be incorporated into the construction project and which will not become the property of the CITY OF BISMARCK. This authorization is granted with the distinct understanding that the CITY OF BISMARCK will receive all benefits from the exemption from payment of the tax. The tax is not included in the CONTRACTOR's bid, and all transportation charges shall be paid by the CONTRACTOR.

104-13 EXTRA WORK

The CONTRACTOR shall perform extra work for which there is no price in the contract whenever it is deemed necessary or desirable in order to complete fully the work as contemplated. If the CONTRACTOR contends that additional compensation is due for work or material not clearly covered in the contract, the CONTRACTOR shall promptly notify the ENGINEER in writing of the intention to file a claim and the basis for additional compensation before beginning or continuing construction on the affected work. If the basis for the claim does not become apparent until after proceeding with the work, and it is not feasible to stop the work, the CONTRACTOR shall immediately notify the ENGINEER that work is continuing and that written notification of the intent to file a claim will be submitted within 10 calendar days. Failure to give the required notification or to provide the ENGINEER proper facilities and assistance in keeping strict account of actual costs will constitute a waiver of the claim for additional compensation in connection with the work already performed. Notification of a claim, and the fact that the ENGINEER has kept an account of the costs involved, shall not be construed as proving or substantiating the claim's validity. Such work shall be performed in accordance with the Specifications. Work contained in the Plans and Specifications shall not be considered extra work and shall not be paid for by the CITY as such unless specifically agreed to in writing.

When work not shown on the Plans is to be performed by the CONTRACTOR, the ENGINEER may order the work done on a force account basis when the measurement and payment becomes too cumbersome to be practicable, or when it is considered to be in the best interest of the CITY OF BISMARCK. Extra work will be paid for at the unit price or lump sum stipulated in the work order authorizing the work or the CITY OF BISMARCK may require the CONTRACTOR to do such work on a force account basis. Compensation for extra work shall be justified in the following manner:

(a) Labor. For all laborers (skilled and unskilled) and foremen in direct charge of the specific operations, the CONTRACTOR shall receive the rate of wage (or scale) agreed upon in writing before beginning work for each and every hour that said laborer and foremen are actually engaged in such work.

The wages of any foreman who is employed partly on the force account work and partly on other work will be prorated according to the number of workers in the two classes of work as shown by the payrolls.

The CONTRACTOR shall receive the actual costs paid to, or on behalf of, workmen by reason of subsistence and travel allowances, health and welfare benefits, pension fund benefits, or other benefits, when such amounts are required by a collective bargaining agreement or other employment contracts generally applicable to the classes of labor employed on the work, but excepting any amounts which are already included in the wage rates paid. Any subsistence or travel allowance paid to the workmen shall be prorated according to the number of hours employed on the force account and other classes of work.

An amount equal to 20 percent of the sum of the above items will also be paid to the CONTRACTOR.

(b) Bond, Insurance, and Tax. For premiums paid on additional bond, property damage, liability, and workers compensation insurance contributions, and Social Security Taxes on the force account work, the CONTRACTOR shall receive the actual cost, to which cost 6 percent will be added. The CONTRACTOR shall furnish satisfactory evidence of the rate or rates paid for such bond, insurance, and tax.

(c) Materials. For materials accepted by the ENGINEER and used, the CONTRACTOR shall receive the actual costs of such materials delivered on the work, including transportation charges paid by the CONTRACTOR (exclusive of machinery rentals as hereinafter set forth), to which cost 15 percent will be added plus any sales tax paid by the CONTRACTOR. For all materials used in connection with but not entering permanently into the work, reasonable depreciation will be allowed.

(d) Equipment. For the use of authorized equipment and additional traffic control devices required by the force account work, the CONTRACTOR will receive rental rates determined in accordance with the then current issue of the North Dakota Department of Transportation (NDDOT) publication entitled *Rental Rates for Equipment and Traffic Control Devices,* which manual shall constitute a part of this Specification. No percentage shall be added to these rates. No allowance will be allowed for equipment replacement or replacement escalators, cost of facilities capital, interest, small tools, or any other additives not listed. All equipment hours will be paid for as straight time. The only equipment payments that will be made are as follows:

> **(1) Owned Equipment.** Payment for the actual hours of CONTRACTOR-owned equipment will be determined using the procedures outlined in the then current edition of the NDDOT manual entitled *Rental Rates for Equipment and Traffic Control Devices.*
>
> The computed hourly equipment cost times the number of hours claimed shall not exceed the CONTRACTOR's actual purchase price for the piece of equipment being claimed.
>
> Subcontractor-owned equipment will be paid for in the same manner as CONTRACTOR-owned equipment unless such equipment has been rented, leased, or hired by the CONTRACTOR, as provided for in (2) below.

(2) Leased, Rented, or Hired Equipment. Payment for leased, rented, or hired equipment shall be the actual invoice payment plus sales tax as verified by paid invoices signed by the lessor, or by checks issued by the CONTRACTOR. If the lease rental is weekly, the weekly rate shall be divided by 40 to get an hourly equipment cost for the claim. If the lease or rental is monthly, the monthly rate shall be divided by 176 to get an hourly equipment cost for the claim.

The computed hourly equipment cost, for each individual piece of equipment, times the number of hours claimed shall not exceed the CONTRACTOR's actual lease or rental cost for the time frame claimed.

(3) Idle Time. The number of hours of equipment use to be paid for will only be the hours that the equipment is operating on the claim item. No payment will be made for equipment on standby unless the standby is directed in writing by the ENGINEER, or the standby is proven to be as the direct result of the CITY's actions or inactions. Standby will be paid at 50 percent of the hourly base rate calculated by dividing the monthly rate by 176. The listed weekly, daily, or hourly rates will not be used. Operating costs will not be paid for hours of idle time.

Payment for standby time will not be made on any day the equipment operates for 8 or more hours. For equipment accumulating less than 8 hours operating time on any normal work day, standby payment will be limited to only that number of hours which, when added to the operating time for that day, equals 8 hours. Standby payment will not be made in any case on days not normally a work day.

The above rental rates to be paid on equipment will be on the size normally used to operate the equipment, subject to approval of the ENGINEER. The above rental rates include gas, oil, repairs, and any other incidentals necessary for the operation of the equipment but do not include the operators. No work will be paid for until unit prices, rental rates, and wages have been agreed upon in writing.

Procedures governing rented or owner-operated equipment, attachments and accessories, types and quantity of equipment, measurement of equipment time, use of equipment in excess of 50 hours per week, standby time, and equipment transportation charges will be as set forth in the NDDOT rental rate publication.

(e) Miscellaneous. No additional allowance will be made for general superintendence, the use of small tools, or other costs for which no specific allowance is herein provided.

(f) Subcontracting. For any force account work performed by a Subcontractor with the written authorization of the ENGINEER, the CONTRACTOR will receive an additional allowance for administrative and overhead expense. The additional allowance will be a percentage of the total force account invoice equal to 10 percent of the first $3,000.00 plus 3 percent of the balance in excess of $3,000.00.

(g) Authority of ENGINEER. The ENGINEER has authority to require alterations in the equipment and labor force assigned to force account work, to limit authorization of overtime work to that normally used on the project for work of similar nature, or to require overtime when an emergency exists, and to require the cessation of force account work when adverse conditions severely limit productivity.

(h) Daily Records. The CONTRACTOR's representative and the ENGINEER shall compare records of the cost of work done as ordered on a force account basis at the end of each day for the purpose of resolving differences.

(i) Statements. No payment will be made for work performed on a force account basis until the CONTRACTOR has furnished the ENGINEER with duplicate itemized statements of the cost of such force account work detailed as follows:

1. Name, classification, date, daily hours, total hours, rate, and extension for each laborer and foreman.

2. Designation, dates, daily hours, total hours, rental rate, and extension for each unit of machinery and equipment.

3. Quantities of materials, prices, and extensions.

4. Transportation of materials.

5. Cost of property damage, liability and workers' compensation insurance premiums, unemployment insurance contributions, and Social Security Tax.

Statements shall be accompanied by receipted invoices for materials used including transportation charges paid by the CONTRACTOR. The statements shall be adjusted, when applicable, to reflect any discounts offered by the supplier. When materials used in the force account work are not specifically purchased for that work but are taken from the CONTRACTOR's stock, the CONTRACTOR shall furnish an affidavit certifying such materials were taken from stock, the quantity claimed was actually used, and that the price and transportation costs claimed are the CONTRACTOR's actual costs.

On or before the tenth day succeeding the completion of the extra work authorized by a "Work Order," the CONTRACTOR shall present to the ENGINEER the original "Work Order," together with a full and complete itemized statement of such extra work, with date of completion of the work mentioned therein. Upon certification by the ENGINEER or his authorized representatives as to the correctness of such items with regard to the amount and character of labor performed and materials furnished under such "Work Order," the ENGINEER shall enter the same as part of the estimate of the amount due the CONTRACTOR. The CONTRACTOR shall not be entitled to receive payment for any extra work in which he fails to present the "Work Order" within the time and in the manner hereinbefore mentioned.

The additional payment based on the percentages specified above shall constitute full compensation for all items of expense not specifically provided for the force account work. The total payment made as provided above shall constitute full compensation for such work.

104-14 OBSERVATION AND TESTING

All materials and equipment used in the construction of the project shall be subject to adequate observation and testing in accordance with generally accepted standards.

The CONTRACTOR shall provide at its expense the necessary testing and inspection services required by the Plans and Specifications unless otherwise provided.

All concrete field testing personnel shall be certified through the American Concrete Institute (ACI) at the minimum level of an ACI Concrete Field Technician Grade I.

All independent testing laboratories provided by the CONTRACTOR shall be accredited independent testing laboratories (heretofore referred to as “independent testing laboratory”) currently certified through the American Association of State Highway and Transportation Officials (AASHTO) accreditation program to perform the required testing and reporting procedures for the specific project.

All laboratory testing reports shall be supplied by the CONTRACTOR to the ENGINEER within 48 hours through email at bisengd@bismarcknd.gov, or as directed by the ENGINEER. Hard copies can also be delivered within 48 hours to the Bismarck Engineering Department located at the following address:

Bismarck Engineering Department
221 North Fifth Street
P.O. Box 5503
Bismarck, ND 58506-5503

If the Plans and Specifications, laws, ordinances, rules, regulations, or orders of any public authority having jurisdiction require any work to specifically be inspected, tested, or approved by someone other than the CONTRACTOR, the CONTRACTOR will give the ENGINEER timely notice of readiness. The CONTRACTOR will then furnish the ENGINEER the required certificates of inspection, testing, or approval.

Neither observations by the ENGINEER nor inspections, tests, or approvals by persons other than the CONTRACTOR shall relieve the CONTRACTOR from its obligations to perform the work in accordance with the requirements of the Plans and Specifications.

The ENGINEER will at all times have access to the work. In addition, authorized representatives and agents of any participating federal or state agency shall be permitted to inspect or observe all work, materials, payrolls, records of personnel, invoices of materials, and other relevant data and records. The CONTRACTOR will

provide facilities for such access and observation of the work and also for any inspection or testing thereof.

If any work is covered contrary to the request of the ENGINEER, it must at the ENGINEER's request be uncovered for the ENGINEER's observation and replaced at the CONTRACTOR's expense.

If any work has been covered which the ENGINEER has not specifically requested to observe prior to its being covered, or if the ENGINEER considers it necessary or advisable that covered work be inspected or tested by others, the CONTRACTOR at the ENGINEER's request will uncover, expose, or otherwise make available for observation, inspection, or testing as the ENGINEER may require, that portion of the work in question, furnishing all necessary labor, materials, tools, and equipment. If it is found that such work is defective, the CONTRACTOR will bear all the expenses of such uncovering, exposure, observation, inspection, and testing and of satisfactory reconstruction. If, however, such work is not found to be defective, the work will be under Section 104, “Extra Work” or an extension of the contract time, or both, directly attributed to such uncovering, exposure, observation, inspection, testing, and reconstruction, and an appropriate work order shall be issued.

104-15 FINISHING AND CLEANUP

From time to time or as may be ordered by the ENGINEER and immediately after completion of the work, the CONTRACTOR shall at its own expense clean up and remove all refuse, including any remaining survey stakes, and unused materials of any kind resulting from the work. Upon failure to do so within 24 hours after request by the ENGINEER, the work may be performed by the CITY and the cost thereof charged to the CONTRACTOR and deducted from the CONTRACTOR's final estimate. All excavated areas along trails, sidewalks, curbs, and other structures shall be backfilled with earth, and the cost of such work shall be incidental to the item of construction.

104-16 WARRANTY

The CONTRACTOR shall guarantee all work and materials and guarantee the performance of the finished project free from material defect or failure for a period of 2 years from the date of substantial completion, and the performance bond shall remain in full force and effect for the period. The CONTRACTOR shall provide this warranty regardless of whether the cause of a failure is known or attributable to the CONTRACTOR, except for damage caused by a third party by no fault of the CONTRACTOR.

In the event the deficiency in work or performance is caused by poor workmanship by the CONTRACTOR, the CONTRACTOR’s liability may, at the discretion of the ENGINEER, extend past the warranty period.

SECTION 105 – LEGAL RELATIONSHIPS AND RESPONSIBILITIES

105-1 DAMAGES

The CONTRACTOR will be held responsible and be required to make good, at the CONTRACTOR's expense, any and all damages to personal property caused by carelessness, neglect, or want of due precaution on the part of the CONTRACTOR.

105-2 UTILITIES

It shall be the responsibility of the CONTRACTOR to be familiar with the location of the existing sanitary sewer, water mains and service lines, storm sewer, oil pipelines, gas mains and service lines, telephone and communication lines, power, light and telephone poles and guys, steam lines, valve boxes and stop boxes, mail boxes, and all appurtenances pertaining to utility and public services. No additional compensation shall be made for extra work or delays due to marked or unmarked utilities, whether shown on plans or not.

The CONTRACTOR shall notify all underground facility operators at least forty-eight (48) hours in advance excluding Saturdays, Sundays, or holidays, and in accordance with NDCC Chapter 49-23 of any construction and consult with personnel of said utility companies regarding any changes or conflicts. The CONTRACTOR is responsible for repairing or replacing any lawn irrigation systems damaged by the CONTRACTOR at no cost to the CITY.

105-3 PROTECTION OF TREES

A CONTRACTOR working on public rights-of-way or properties shall be responsible for the prevention of damage to trees, shrubs, bushes, hedges, or other woody plants located within or infringing on the public rights-of-way and properties, including parks, and shall notify the City Forestry Department prior to beginning any construction near said trees.

The CONTRACTOR shall exercise care in driving or working on the root zone area of trees to prevent excessive compaction of the soil. Gaseous, liquid, or solid substances which are harmful to plantings shall not come into contact with any plantings. Nails, bolts, or other fastening materials shall not be imbedded into the trunk or limbs of a tree. Ropes, wires, or other hanging materials shall not be attached to a plant in such a manner that the bark may be damaged or cause undue stress to the plant structure. Materials or debris shall not be stored above the root zone of any tree which may impede the free passage of air, water, or nutrients, except by written permission of the City Forester.

Any overhanging branches or underlying roots which may be crushed, scarred, broken, or damaged in any way due to unavoidable construction activity shall be reported to the City Forester so that preventive action may be taken to minimize damage to plants. Any trees damaged without prior notification of the City Forester shall be the responsibility of

the CONTRACTOR to repair or replace using a licensed tree service, upon determination by the City Forester.

If it is determined by the City Forester that ditches, tunnels, trenches, or other earthmoving operations for underground utilities construction will cause damage to the health, vigor, and stability of plants, the City Forester may require that power-driven soil augers or the power push method be used wherever possible. Where this is not possible, the City Forester must be notified to assist in determining alternate methods. If trees must be pruned, fertilized, or removed prior to construction, as determined by the City Forester, all costs using prescribed methods shall be the responsibility of the CONTRACTOR. The CONTRACTOR shall become familiar with and adhere to the Forestry Department's Standard Specifications on trenching and augering around trees.

Prior to backfilling any trench or ditch, the City Forester shall be notified to inspect any repairs made to damaged roots. All exposed roots shall be pruned or trimmed using a hand pruner or hand saw. Axe cuts will not be allowed.

Upon completion of construction, the CONTRACTOR shall notify the City Forester for a final inspection of the trees whether or not any damage occurred. Any damage found to have been due to the construction activity of the CONTRACTOR shall be the remedial responsibility of the CONTRACTOR to be corrected by a licensed tree service.

105-4 CITY CONDUCTOR DAMAGE

Any cost to locate damages to CITY electrical conductors or any other components of the CITY lighting, traffic signal, or other systems will be billed to the CONTRACTOR. The CITY OF BISMARCK will bill at the current CITY rates for labor, equipment, and materials as needed. If there are any questions, contact the City of Bismarck Public Works Department at 701-355-1700.

Before any repairs are made, the damage shall be inspected by a CITY street light or traffic signal technician to determine the extent of the damage and dictate the necessary repair.

If damage causes more than 2 splice repairs to roadway lighting conductors in a direct-buried run between poles or to a junction box, the entire conductor run shall be replaced. Splices are not allowed on traffic signal conductors including direct-bury power supply.

If damage occurs to a conductor run contained in a conduit which would require a conductor splice repair, the entire conductor run shall be replaced and the conduit must be repaired.

If damage occurs to conductors which were not located, or if due care is not exercised in exposing conductors, the entire conductor run shall be replaced.

Damaged conductors shall be replaced or repaired within 24 hours of discovery, or the

CITY will cause the repairs to be made and bill the CONTRACTOR. Any underground repairs shall be made in accordance with Section 1001 “Underground Splices”.

Prior to covering up any repairs, the CITY shall be notified to inspect the repair. Once repairs are accepted, the site shall be restored.

105-5 STREET SIGN REMOVE AND REINSTALL

Any existing and permanent signs shall be removed and reinstalled by the CITY OF BISMARCK. The CONTRACTOR shall give the ENGINEER a 3 working day notice to schedule the removal at the time needed. The CONTRACTOR shall be assessed $300.00 per sign for signs removed without the ENGINEER’s approval.

SECTION 106 – PROSECUTION AND PROGRESS

106-1 TIME OF BEGINNING AND COMPLETION OF WORK

If specified, the work on the contract shall be started on a date to be specified in the Advertisement for Bids, Special Provisions, or in a written order from the Board of City Commissioners. If a start date is not specified, the CONTRACTOR may begin work at his discretion. The work on the contract shall be completed on the date specified in the Proposal. Work shall continue without interruption until the contract is completed except for weather conditions or at the discretion of the ENGINEER. The Board of City Commissioners reserves the right to determine in what order the work shall be done, and the work shall be executed in accordance with such directions.

106-2 LIQUIDATED DAMAGES

The CITY and the CONTRACTOR recognize that time is of the essence of the agreement. They further recognize that not only will the CITY suffer financial loss if the work is not completed within the times specified in the contract, plus any extensions thereof allowed pursuant to the terms of the contract, but also the public of the CITY OF BISMARCK will suffer damages extremely difficult to estimate.

The parties recognize the delays, expense, and difficulties involved in proving the actual loss and damages suffered by the CITY and by the public of the CITY OF BISMARCK if any of the work is not completed on time.

The parties further recognize the CITY has made a reasonable endeavor to estimate the actual loss and damages which might be occasioned upon the CITY and the public of the CITY OF BISMARCK in the event of delay of completion of any of the work and that the CONTRACTOR was allowed input on this amount within 5 days prior to the bid opening.

Thus, both parties agree that the amounts of liquidated damages set forth herein to be assessed in the event of a delay in completion of any of the work are both reasonable in

amount and reasonably related to the actual damages which the parties, through their reasonable endeavors, have estimated could occur upon delay in completion of any of the work.

Accordingly, instead of requiring any actual proof of damages in the event that the CONTRACTOR shall neglect, refuse, or fail to complete any work within the time specified in the contract, the CITY and the CONTRACTOR agree that, as liquidated damages for delay (and not as a penalty), the CONTRACTOR shall pay the CITY the amount required in the schedule set forth in this specification, the Project Proposal, Advertisement for Bids, or Special Provisions for each day that expires after the time specified in the contract that any of the work is not complete unless extensions are allowed pursuant to the terms of the contract.

Finally, the CITY and the CONTRACTOR specifically recognize that the recitals in this paragraph are conclusive presumptions, pursuant to Section 31-11-02 of the North Dakota Century Code. The decision of the ENGINEER for the non-completion of the work shall be binding upon both parties. Liquidated damages shall be based on the schedule below unless otherwise adjusted based on circumstances of the project as stated in the Advertisement or Special Provisions.

Liquidated damages will be charged beginning the day after the date of substantial completion specified in the contract documents, or the day after any time extension granted by the ENGINEER. Liquidated damages will be charged for each calendar day of delay until the project is substantially complete.

Substantial completion is defined as the improvement being operational and ready for use by the CITY OF BISMARCK. Water mains must be constructed, pressure tested, passing results achieved for both bacteriological tests, and conveying potable water; sewers must be constructed, tested, accepted, and conveying either storm water or sanitary sewer; streets must be constructed and open to traffic; and street lights and traffic signals must be installed, tested, and energized.

The CITY will not assess liquidated damages during a period when the project is in an authorized state of suspension.

Contract Amount	Damages Per Calendar Day
$0 to $250,000	$200
$250,001 to $500,000	$300
$500,001 to $1,000,000	$500
$1,000,001 to $2,500,000	$1,000
$2,500,001 to $5,000,000	$1,500
Over $5,000,000	$2,500

SECTION 107 – MEASUREMENT AND PAYMENT

107-1 QUANTITIES

The quantities shown on the Plan sheets entitled "Approximate Quantities" are estimated quantities based on information available at the time of design. It is mutually understood that these quantities may change at the time of construction due to unforeseen conditions which may be encountered during construction. The Board of City Commissioners reserves the right to designate the amount of work to be completed. Payment shall be made for the final amount of work complete and accepted at unit prices specified in the contract.

107-2 ESTIMATES AND PAYMENTS

The ENGINEER shall make a monthly approximate measurement of the work done to date and an estimate of the value of the same at the prices agreed upon in the contract. When directed by the ENGINEER, the CONTRACTOR shall measure the work completed and submit to the ENGINEER in duplicate copy form an estimate of the work completed to date and value of same at the prices agreed upon in the contract.

The ENGINEER shall retain 10 percent of the amount of each payment until 50 percent of all work in the contract documents has been completed and accepted by the ENGINEER. No further amount of retainage shall be withheld from payments after 50 percent of the contract has been completed unless the ENGINEER has on file any valid claims against the CONTRACTOR by the CITY OF BISMARCK or others. The ENGINEER may reduce the amount retained upon completion of 90 percent of all work in the contract documents and accepted by the ENGINEER. On completion and acceptance of a part of the work on which the price is stated separately in the Contract Documents, payment in full may be made, including retained percentages less authorized deductions.

Payment for materials in storage may be added to any monthly estimate. The CONTRACTOR must submit the materials invoice, and the materials must be stored on CITY lands or rights-of-way, at the site, or as directed by the ENGINEER to be eligible for payment. All materials not in storage as directed by the CITY shall be deducted from the materials invoice. No retainage will be deducted for materials stored as directed by the CITY.

107-3 FINAL PAYMENT

After the work has been completed, the ENGINEER will prepare a final statement showing the quantities of each and every item of work performed by the CONTRACTOR. All estimates upon which previous payments have been based are partial estimates and are subject to correction in the final statement. The final statement showing the entire quantity and value of each and every item of work

performed will be submitted to the CONTRACTOR for its approval before being processed by the CITY for payment.

(a) Overpayment. If the final statement shows that the total of all partial payments made exceeds the total amount due to the CONTRACTOR, the CONTRACTOR shall promptly refund to the CITY the amount of such overpayment. If such refund is not made, the CITY shall have the right to deduct the amount thereof from any moneys due to the same CONTRACTOR under any other contract, either present or future or pursue other means of repayment.

107-4 OIL PRICE ADJUSTMENT

The invoices for the bituminous seal oil shall be provided with the executed CITY agreement for the project. Payment for these oils used during the current construction season will be based on the unit prices bid for the project. The bid prices for these oils will be increased or decreased based on the difference between the current construction season oil prices and those of the following construction season. The annual adjustment will be based on the invoices for these oils submitted 2 weeks prior to the start of construction operations that following construction season.

107-5 FUEL COST ADJUSTMENT CLAUSE W/DOT ATTACHMENT

The fuel oil adjustment clause contained herein provides for a price adjustment in the form of payment to the CONTRACTOR or a rebate to the CITY for fluctuations in the cost of motor fuel (both diesel and gasoline) consumed in the performance of applicable construction work. The price adjustment provisions are applicable only to contract items if gasoline and/or diesel are used as the primary fuel in the production of the affected items. The price adjustment provisions are also applicable to these eligible pay items when the CITY adds extra work to the contract.

The provision will remain in effect throughout the duration of the contract. Enactment of the fuel oil price adjustment clause will only be considered when the **increase or decrease** in the price of motor fuel as defined herein exceeds 10 percent.
The fuel oil adjustment clause is intended to reduce but not eliminate the cost effects of price uncertainty to the CONTRACTOR and the CITY for motor fuel used in the construction of this contract. It provides for sharing by the CITY in a portion of the CONTRACTOR's risk, which could result from unusual price fluctuations. The provision is not intended to compensate the CONTRACTOR for normal day-to-day fluctuations and seasonal changes or to serve as a guarantee of full compensation for motor fuel price fluctuations.

Motor and burner fuels may have cost adjustments made in accordance with NDDOT Special Provision dated September 8, 2006, City Standard Form 1407-1. Substitute CITY OF BISMARCK for NDDOT as it applies.

The contract unit price shall be firm for the first month of the contract period. Thereafter, the CONTRACTOR may request a price adjustment (increase or decrease)

at a minimum frequency of one (1) month. A written request for a price adjustment must be submitted to the ENGINEER and must include justification for the proposed change.

The justification should establish a base line at the time of bidding or last approved price adjustment and current pricing. For example, a copy of an invoice for burner fuel at the time of bidding would establish the base line, and an invoice at the time of the request would indicate the increase or decrease.

The CITY will respond as follows:

(1) The request may be granted.
(2) More justification may be requested.
(3) The price paid may continue without change.

The baseline for Midwest Diesel Price shall be determined by U.S. Department of Energy weekly statistics, if it becomes a factor in justifying price increases based on material transport.

If a price adjustment is approved by the CITY, the date the adjustment will be effective along with the new unit prices will be included in the written response to the CONTRACTOR. Approval of any price adjustments renews the 1 month firm price period.

The CITY shall also be advised of and receive the benefit of any price decrease. The same notification and review process will apply to a decrease in cost.

SECTION 200

EARTHWORK

SECTION 201 – CLEARING AND GRUBBING/MISCELLANEOUS REMOVALS

201-1 DESCRIPTION

This item shall consist of clearing and grubbing, including the disposal of materials, for all areas within the construction limits designated on the plans or as directed by the ENGINEER.

Clearing and grubbing shall consist of clearing the ground surface of the designated areas of all trees, stumps, downed timber, logs, snags, brush, undergrowth, hedges, heavy growth of grass or weeds, fences, structures, debris, rubbish of any nature, natural obstructions, or such material which in the opinion of the ENGINEER is unsuitable for the foundation of pavements or other required structures. This shall also include the grubbing of stumps, roots, and foundations and the disposal from the project of all spoil materials resulting from clearing and grubbing.

201-2 CONSTRUCTION REQUIREMENTS

201-2.1 GENERAL. The areas denoted on the plans to be cleared and grubbed under this item shall be staked on the ground by the ENGINEER. The clearing and grubbing shall be done at a satisfactory distance in advance of the grading operations.

Disposal of all spoil materials removed by the clearing and grubbing shall be done at an approved disposal area.

The removal of existing structures and utilities required to permit orderly progress of work shall be accomplished by local agencies, unless otherwise shown on the plans. Whenever a utility pole, pipeline, conduit, cable, sewer, roadway, or other utility is encountered and must be removed or relocated, the CONTRACTOR shall advise the ENGINEER who will notify the proper authority or Owner and attempt to secure prompt action.

201-2.2 CLEARING AND GRUBBING. In areas designated to be cleared and grubbed, all stumps, roots, buried logs, brush, grass, and other unsatisfactory materials shall be removed. In cases where such depths of embankments are to be made, all unsatisfactory materials shall be removed. Sound trees and stumps, except in a storm water embankment, may be cut off within 6 inches above the ground and allowed to remain. Roots and other projections over 1½ inches in diameter shall be grubbed out to a depth of at least 18 inches below the finished subgrade or slope elevation.
All holes remaining after the grubbing operation in embankment areas shall have the sides broken down to flatten out the slopes and shall be filled with acceptable material, dried or moistened, and properly compacted in layers to the density required in Section

202. The same construction procedure shall be applied to all holes remaining after grubbing in excavation areas where the depth of holes exceeds the depth of the proposed excavation.

Any buildings and miscellaneous structures that are shown on the plans to be removed shall be demolished or removed, and all materials therefrom shall be removed from the site. The remaining foundations, wells, cesspools, and all like structures shall be destroyed by breaking out or breaking down the materials of which the foundations, wells, cesspools, etc., are built and removing the footing and walls or as specified on the plans. Any broken concrete, blocks, or other objectionable material which cannot be used in backfill shall be removed and disposed of by the CONTRACTOR. The holes or openings shall be backfilled with acceptable material and properly compacted.

201-2.3 TREE REMOVAL. When the proposal indicates tree removal by individual unit basis, removal shall consist of cutting the tree down and immediate removal of the stump by routing or excavation to a point 16 inches below the ground line. The tree shall be disposed of properly.

All tree removal done within clearing and grubbing limits shall be done utilizing a contractor licensed with the City of Bismarck's Forestry Department.

The debris associated with the stump removal shall be removed and replaced with compacted suitable material to within 4 inches of the finished surface. The CONTRACTOR shall place 4 inches of compacted topsoil, seed, and mulch the area. Removal of debris and placement and compaction of material and topsoil shall be incidental to the tree removal bid item. Seeding and Mulching shall be measured and paid by the square yard (SY) for the respective bid items.

201-2.4 TREE ROOT CUTTING. The CONTRACTOR shall be responsible for the prevention of damage to trees, shrubs, bushes, and hedges.

When tree roots are found larger than 3 inches in diameter during construction, the CONTRACTOR must contact the City of Bismarck's Forestry Department to determine if such roots shall be cut and/or if the tree shall be removed before continuing any further construction.

When the City Forester determines that the roots may be cut, all roots shall be cut cleanly to avoid jagged rough ends. A visual inspection of tree root cuts shall be made by the City Forester.

All roots greater than 3 inches in diameter shall be cut using a hand pruner, hand saw, power saw, or stump grinder.

201-2.5 REPLACE TREE. Tree replacement shall consist of furnishing and installing a freshly dug 2-inch diameter or larger, balled and burlapped tree which shall not show any signs of damage. All containers, wire, plastic, fabric, burlap, rope, string, twine, or any other extraneous material shall be removed from the root ball. Depth of the root

ball is measured from the top of the root ball, which in all cases shall begin at the root flare. Soil above the root flare shall not be included in ball depth measurement and shall be removed. The planting hole shall be only as deep as needed, and the root flare shall be visible after planting.

The CONTRACTOR shall supply wood chip mulch. Individual trees shall be mulched with a 6-foot diameter circle of wood chip mulch 4 inches deep, leaving a 1-inch to 2-inch mulch-free area around the tree trunk. Staking shall consist of 2 stakes evenly spaced with a finished height of not less than 4 feet at installation. Tree straps placed around the tree trunk shall be a minimum of 1½ inches wide, and made of a soft material with a grommet at each end. Tree straps shall be placed at the lowest practical level on the trunk to maintain it upright. Lower trunk protection shall consist of a minimum 4-inch diameter corrugated plastic pipe, 12 inches in height, cut on one side for installation and removal. Care must be taken while applying to avoid injury to the bark.

The tree shall be warranted for 1 year from final acceptance of the project and shall be in satisfactory condition at the end of the warranty period.

201-2.6 TREE PRUNING. Crown raising pruning to allow for clearance of construction equipment.

All pruning shall be made in conformance with the latest version of ANSI A300 (Part 1) Pruning Standard. The CONTRACTOR is to inspect each tree at time of pruning for structural defects and/or potential hazards. Such defects or hazards must be reported to the City Forester or his agent.

No topping, pollarding, or heading back will be allowed unless specifically authorized by the City Forester.

Equipment that will damage the bark and cambium layer shall not be used on, or in, the tree. For example, the use of climbing spurs is not acceptable work practice for pruning operations on live trees.

All broken branches shall be removed.

All pruning shall be performed with consideration of the tree species' inherent growth (i.e., vase shaped, pyramidal, broad-oval, etc.). Improving and/or maintaining tree health is a critical consideration as well as clearance needs.

Sharp tools shall be used so clean cuts will be made at all times.

All cut limbs shall be removed from the crown upon completion of the pruning. All pruning including branches, chips, and rakings must be removed from the site and transported to the disposal site daily.

Driveways shall only be blocked when necessary for as short a period as possible. Vehicles and equipment may not be driven on boulevards and shall not enter upon any private property.

Minimal cuts shall be made to avoid construction damage to elm tree and other species susceptible to regional diseases between April 1st and October 1st.

Trees shall be pruned to provide:

10 feet of clearance over sidewalks, rights-of-way, and private property, including structures.
14 feet of clearance over street on residential and collector streets.
16 feet of clearance over street on arterial streets.

Live crown should not be reduced to less than 50 percent.

If, during the work, the CONTRACTOR determines that the tree possesses defects, which cause the tree to be structurally unsound, the CONTRACTOR shall notify the City Forester immediately. The City Forester shall make the final determination as to what action shall be taken.

A proposed tree listing will be provided prior to construction activities, but may not be 100% accurate. Each tree pruned is to be recorded with work date, current diameter, and additional comments as needed. Some trees may need extensive work, others very minor or no work. The CONTRACTOR will make the determination of what each tree needs based on specifications.

201-3 MEASUREMENT AND PAYMENT

201-3.1 CLEARING AND GRUBBING. Clearing and Grubbing shall be considered a lump sum and shall be paid for at the unit price bid for "Clearing and Grubbing" complete and approved by the ENGINEER.

201-3.2 TREE REMOVAL. When the proposal indicates measurement by individual unit basis, the trees shall be classed in accordance with the diameter size as measured at a point 54 inches above the ground level or at a designated height specified in the proposal. The accepted quantities of "Tree Removal" shall be measured and paid for at the unit price bid for the following items:

Pay Item	Unit
Tree Removal (0" to 2")	Incidental to other items
Tree Removal (2" to 6")	Each
Tree Removal (7" to 12")	Each
Tree Removal (13" to 24")	Each
Tree Removal (over 24")	Each

201-3.4 REPLACE TREE. Measurement and payment shall be per each (EA) for “Replace Tree” complete, in place, and accepted by the ENGINEER.

201-3.5 TREE ROOT CUTTING. Tree Root Cutting shall be measured on an individual basis for each root cut (EA) and accepted by the ENGINEER. There shall be no payment of tree root cuttings less than 3 inches in diameter. Tree Root Cutting shall be paid for at the unit price for "Tree Root Cutting" complete and approved by the City Forester.

201-3.6 BUILDING REMOVAL. Building removal shall be measured by the individual unit basis (EA) and paid for at the unit price bid for "Building Removal," including the foundation, complete and approved by the ENGINEER.

201-3.7 FOUNDATION REMOVAL. Foundation Removal shall be measured by the individual unit basis (EA) and paid for at the unit price bid for "Foundation Removal" complete and approved by the ENGINEER.

201-3.8 TREE PRUNING. Tree Pruning shall meet the requirements of this section and shall be measured and paid for per each (EA) at the unit price bid for “Tree Pruning” complete and approved by the ENGINEER.

SECTION 202 - EXCAVATION AND EMBANKMENT

202-1 DESCRIPTION

This item shall consist of excavating, hauling, placement, disposal, and compaction of embankment material in accordance with these specifications and in conformity with the dimensions and typical sections shown on the plans and with the lines and grades established by the ENGINEER.

"Unstable," "Unsuitable," "Suitable," and "Unsatisfactory" soil or aggregate items shall be defined as follows:

a. UNSATISFACTORY MATERIALS

Unsatisfactory materials are those materials which have been determined to be unsuitable for subgrade foundations, including all unsuitable soils, rock, shale, hardpan, loose rock, boulders, concrete chunks or slabs, debris, tree roots, stumps and any other materials deemed unsatisfactory by the ENGINEER for use in subgrades or embankments. Unsatisfactory material shall become the CONTRACTOR's responsibility to dispose of.

All suitable material taken from excavations shall be used in the formation of embankment, subgrade, and for backfilling as indicated on the plans or as directed by the ENGINEER.

When the volume of the excavation exceeds that required to construct the embankments to the grades indicated, the excess shall be used to grade the areas of ultimate development or become the CONTRACTOR's property as directed by the ENGINEER. When the volume of excavation is not sufficient for constructing the fill to the grades indicated by the ENGINEER, at locations designated on the plans or the special provisions, the additional material required shall be identified by the ENGINEER and paid as "Borrow Excavation."

b. UNSUITABLE SOILS

Unsuitable soils are those soils which in their natural state are unsuitable for subgrade foundation due to a high organic content such as vegetation, matted roots, tree roots, peat, topsoil, or muck. Soils of these types are very susceptible to consolidation due to the decaying of this organic matter. Other unsuitable soils are those which contain decomposable debris and ashes. Frozen material will not be allowed. Unsuitable material shall become the CONTRACTOR's responsibility to dispose of.

The frozen condition of any soil or material shall not constitute a basis for a change of classification. Although frozen material shall not be allowed in the trench unless otherwise indicated, it shall be recompacted after it has thawed as directed by the ENGINEER.

c. UNSTABLE SOILS

Unstable soils are those soils which in their natural or existing condition require manipulation, aeration, or wetting and recompaction to obtain the required density for a suitable subgrade foundation. This condition is usually caused by too high of a moisture content for cohesive soils and too loose and/or dry for granular soils.

In the case of cohesive soils which in their natural state the moisture content exceeds optimum moisture, they begin to behave as plastic rather than solid. Scarifying and windrowing to a depth of 6 to 18 inches and recompacting the soil in 6-inch lifts to the required density/optimum moisture relationship will usually correct this condition. The other alternative is to subcut to prescribed depth and replace the cohesive material in accordance with specifications.

In the case of granular soils that are too loose, usually subcutting to a depth of 6 to 18 inches and replacing the soil in 6-inch lifts to the required density/optimum moisture relationship will correct this condition.

In either case, these soils should not have to be replaced with more desirable soils; it is merely that in their natural state they are unstable but not unsuitable for subgrade foundation.

d. SUITABLE MATERIALS

Suitable materials are those materials which have been determined to be satisfactory for subgrade foundations, including all stable or unstable soils and any other materials deemed satisfactory by the ENGINEER, for use in subgrades or embankments.

202-2 CLASSIFICATION

All material excavated shall be defined as "Unclassified Excavation" unless, in the proposal form, prices are asked and bids are taken for "Rock Excavation" and "Borrow Excavation."

"Unclassified Excavation" shall include all excavation performed under this item regardless of the material encountered.

"Rock Excavation," when provided in the proposal, shall include all solid rock in ledges, in bedded deposits, in unstratified masses, and in conglomerate deposits which are so firmly cemented they present all the characteristics of solid rock and which cannot be removed without drilling and blasting. All rock not allowed to be placed in the backfill or embankment, as directed by the ENGINEER, shall be considered “Rock Excavation.”

"Borrow Excavation" shall consist of approved material required for the construction of embankments or for other portions of the work and shall be obtained from approved

sources. Unless otherwise designated in the contract, the CONTRACTOR shall pay all costs involved.

The CONTRACTOR shall notify the ENGINEER in advance of opening any borrow areas so that the borrow material can be tested before being used. Sufficient time for testing the borrow shall be allowed.

202-3 CONSTRUCTION REQUIREMENTS

202-3.1 GENERAL. The rough excavation shall be carried to the necessary depth to obtain the specific depth of subgrade compaction shown on the plans. Likewise, on embankments the depth of subgrade compaction shall be as shown on the plans. Should the CONTRACTOR through negligence or other fault excavate below the designated lines, the excavation shall be replaced with approved materials in an approved manner and condition at the CONTRACTOR's expense.

The ENGINEER shall have complete control over the excavation, moving, placing, and disposition of all material and shall determine the suitability of material to be placed in embankments. All material determined unsuitable shall be disposed of in waste areas or as directed by the ENGINEER. Topsoil shall not be used in fills or in subgrades but shall be handled and placed as directed.

The CONTRACTOR shall inform and satisfy itself as to the character, quantity, and distribution of all materials to be excavated. No payment will be made for any excavated material which is used for purposes other than those designated. All spoil areas shall be leveled to a uniform line and section and shall present a neat appearance before project acceptance. The surface elevation of spoil pile areas shall not extend above the surface elevation of adjacent or contiguous usable areas unless approved by the ENGINEER. All spoil piles approved by the ENGINEER shall be seeded and appropriate erosion control constructed.

The roadway right of way shall be graded as per Standard Detail 200-1.

The ENGINEER shall provide centerline stakes to prepare the grading. The CONTRACTOR shall be responsible for staking all other grades necessary to complete grading as per plans or specifications.

The ENGINEER shall verify that finished grading of roadway is within 0.05 foot below to 0.15 foot above the final subgrade elevation specified, and the average grading of any 500 lineal foot section of roadway shall be within 0.1 foot above the final subgrade elevation specified. If grading does not meet tolerance, the CONTRACTOR shall be responsible for regrading to meet tolerance.

The ENGINEER shall verify that finished grading of stormwater ponds shall be within plus/minus 0.25 foot of design grade. If grading does not meet tolerance, the CONTRACTOR shall be responsible for regrading to meet tolerance.

Those areas outside of the pavement areas in which the top layer of soil material becomes compacted due to hauling or to any other activity of the CONTRACTOR, shall be scarified and disked to a depth of 4 inches, as directed, to loosen and pulverize the soil.

If it is necessary to interrupt existing surface drainage, sewers, or underdrainage, conduits, utilities, or similar underground structures, or parts thereof, the CONTRACTOR shall be responsible for and shall take all necessary precautions to protect and preserve or provide temporary services. When such facilities are encountered, the CONTRACTOR shall notify the ENGINEER, who shall arrange for their removal, if necessary. The CONTRACTOR shall assume all costs to repair all damage to such facilities or structures which may result from operations of the CONTRACTOR during the period of the contract.

The CONTRACTOR shall engage an independent soils testing laboratory approved by the ENGINEER to determine the soil proctors for each soil condition to be encountered on the project and perform the required compaction testing to be determined by the ENGINEER.

The compaction control tests for this section are based on 1 individual compaction test per 200 cubic yards of fill or 750 square yards of area, whichever is greater. The CONTRACTOR shall be responsible for all retesting of failed tests. The time, locations, depths, and frequency of compaction testing shall be at the discretion of the ENGINEER during construction. Should it become necessary to conduct an additional number of initial compaction tests, over and above the number specified, the CITY OF BISMARCK shall be responsible for all costs associated with additional testing performed by an independent soils testing laboratory. The CONTRACTOR, however, will be required to assume the cost of all retesting of failed tests, regardless of the total number required during construction. Compaction testing to determine densities may be accomplished with a nuclear density testing apparatus, the sand cone method or drive cylinder. Should disputes arise concerning test results, they will be resolved by using only the sand cone method of testing.

Written reports of all test results shall be supplied to the ENGINEER and the CONTRACTOR by the testing laboratory as soon as possible.

Compaction control tests as stated above shall be incidental to the price bid for related bid items.

202-3.2 EXCAVATION. Excavation shall be performed as indicated on the contract plans to the lines, grades, and elevation shown or as directed by the ENGINEER, and shall be made so the requirements for formation of embankments can be followed. No excavation or stripping shall be started until the ENGINEER has taken cross-sectional elevations and measurements of the existing ground surface and has staked out the proposed work. All material encountered within the limits indicated shall be removed and disposed of as directed. During the process of excavation, the grade shall be maintained so that it will be well drained at all times. When directed, temporary drains

and drainage ditches shall be installed to intercept or divert surface water which may affect the work.

If, at the time of excavation, it is not possible to place any material in its proper section of the permanent construction, it shall be stockpiled in approved areas for later use.

Rock, shale, hardpan, loose rock, boulders, or other material unsatisfactory for subgrades, streets, roads, shoulders, intermediate areas, or any areas intended for turfing shall be excavated to a minimum depth of 12 inches, or to the depth specified by the ENGINEER, below the contemplated surface of the subgrade or the designated grades. Muck, peat, topsoil, matted roots, tree roots, rock, grasses, or other yielding material, unsatisfactory for subgrade foundation, shall be removed to the depth specified to provide a satisfactory foundation. Unsatisfactory materials shall be disposed of at locations designated by the ENGINEER. All material so excavated shall be paid for at the unit price bid per cubic yard for "Unclassified Excavation" or for "Rock Excavation," as the case may be, when the classification for the last 2 items is provided in the proposal. The portion so excavated shall be refilled with suitable selected material as specified, obtained from the grading operations or borrow area, and thoroughly compacted by rolling. The necessary refilling will constitute a part of the embankment. Where rock cuts are made and refilled with selected material or where trenching out is done to provide for a course of pavement, the depths thus created shall be ditched at frequent intervals to provide drainage.

The CONTRACTOR shall make the distribution as indicated on the plans. Widening or narrowing of the section and raising or lowering of the grade to avoid haul will not be permitted. The ENGINEER reserves the right to make minor adjustments or revisions in lines or grades, if found necessary, as the work progresses due to discrepancies in the plans or to obtain satisfactory construction.

Overbreak, including slides, is that portion of any material displaced or loosened beyond the finished work as planned or authorized by the ENGINEER. The ENGINEER, whose decision shall be final, shall determine if the displacement of such material was unavoidable. All overbreak shall be removed by the CONTRACTOR and disposed of as directed; however, payment will not be made for the removal and disposal of overbreak which the ENGINEER determines as avoidable. Unavoidable overbreak will be classified as "Unclassified Excavation."

The removal of existing structures and utilities required to permit the orderly progress of work will be accomplished by local agencies unless otherwise shown on the plans. All existing foundations or footings shall be excavated by the CONTRACTOR and the material disposed of as directed. All foundations thus removed shall be backfilled with suitable material and compacted.

In cut areas, the subgrade under areas to be paved shall be compacted to the depths and to the densities and moisture as shown on the plans or as specified in the specifications, or when not otherwise shown or specified, to a minimum depth of 6 inches and to a density of not less than 90 percent of the maximum dry density with a

moisture content falling within plus or minus 3 percent of optimum moisture as determined by the compaction control tests specified in ASTM D1557. Any unsuitable materials encountered shall be removed and paid for as specified.

No payment or measurement for payment will be made for suitable materials removed, manipulated, and replaced in order to obtain density. Any removal, manipulation, aeration, replacement, and recompaction of suitable materials necessary to obtain the required density shall be considered as incidental to the excavation and embankment operations and shall be performed by the CONTRACTOR at no additional cost to the project.

Stones or rock fragments larger than 2 inches in their greatest dimension will not be permitted in the top 6 inches of the subgrade. The finished grading operations conforming to the typical cross section shall be completed and maintained at least 400 feet (1 block) ahead of the paving operations.

In cut areas, all loose or protruding rocks on the back slopes shall be barred loose or otherwise removed to line or finished grade of slope. All cut-and-fill slopes shall be uniformly dressed to the slope, cross section, and alignment shown on the plans or as directed by the ENGINEER.

202-3.3 BORROW EXCAVATION. When provided for in the proposal, borrow excavation shall consist of excavation made from borrow areas outside the plan grading limits. Upon completion of borrow operations, the borrow area shall be finished to a neat and uniform grade acceptable to the ENGINEER.

The borrow excavation shall be handled and placed as specified in these specifications for excavation and embankment.

202-3.4 DITCH EXCAVATION. Ditch excavation shall consist of excavating for drainage ditches such as intercepting, inlet or outlet, temporary levee construction, or any other type as designated or as shown on the plans. The work shall be performed in the proper sequence with the other construction. The location of all ditches or levees shall be established on the ground. All satisfactory material shall be placed in fills; unsatisfactory material shall be placed in spoil areas as shown on the plans or removed from the project area as directed by the ENGINEER. Waste or surplus material shall be disposed of as shown on the plans or as directed by the ENGINEER. Intercepting ditches shall be constructed prior to the start of adjacent excavation operation. All necessary handwork shall be performed to secure a finish true to line, elevation, and cross section, as designated.

Ditches constructed on the project shall be maintained to the required cross section and shall be kept free from debris or obstructions until the project is accepted. Where necessary, sufficient openings shall be provided through spoil banks to permit drainage from adjacent lands. All ditches constructed shall be secured with erosion and sediment control as shown on the plans, or as directed by the ENGINEER.

Unless otherwise specified, no separate payment will be made for ditch excavation other than for the material removed which will be paid for at the unit price for "Unclassified Excavation" or "Rock Excavation," as the case may be, if the proposal includes classification of these excavated materials.

202-3.5 EMBANKMENT FOUNDATION PREPARATION. Immediately prior to the placing of the fill materials, the entire area upon which the embankment is to be placed, except where limited by rock, shall be scarified and broken by means of a disc harrow or plow or other approved equipment to a minimum depth of 6 inches or as specified by the ENGINEER. Scarifying shall be done approximately parallel to the axis of the fill. All roots, debris, large stones, or objectionable material that would cause interference with the compaction of the foundation or fill shall be removed from the area and disposed of as directed by the ENGINEER. A thin layer (approximately 3 inches) of all the fill material shall be spread over the scarified foundation and the whole area compacted as required in the specifications. Payment will be made for the material excavated for the embankment foundation at the unit price bid for “Unclassified Excavation.”

Where embankments are to be placed on natural slopes steeper than 3-to-1, horizontal benches shall be constructed as shown on the plans or as directed by the ENGINEER. Payment will be made for the material excavated on the embankment slopes at the unit price bid for “Unclassified Excavation.”

202-3.6 STRIPPING. All vegetation such as brush, heavy sods, heavy growth of grass, peat, topsoil, rubbish, tree roots and stumps, and any other unsuitable material within the area upon which embankment is to be placed shall be stripped or otherwise removed before the embankment is started, and in no case shall such objectionable material be allowed in or under the embankment. No direct payment will be made for stripping. The yardage removed and disposed of shall be paid for at the unit price bid per cubic yard for "Unclassified Excavation."

202-3.7 FORMATION OF EMBANKMENTS. Embankments shall be formed of satisfactory materials placed in successive horizontal layers of not more than 8 inches in loose depth for the full width of the cross section.

The grading operations shall be conducted and the various soil strata shall be placed to produce a soil structure as shown on the typical cross section, or as directed by the ENGINEER. All materials placed in the embankment shall be reasonably free of organic matter such as leaves, grass, tree roots, peat, and other objectionable material. Soil, granular material, shale, and any other material permitted for use in embankment shall be spread in successive layers as specified.

Earthwork operations shall be suspended at any time when satisfactory results cannot be obtained because of rain, freezing weather, or other unsatisfactory conditions of the field. The CONTRACTOR shall drag, blade, compact, or slope the embankment to provide proper surface drainage.

The material in the layers shall be of the proper moisture content before rolling to obtain the prescribed compaction. Wetting or drying of the material and manipulation when necessary to secure a uniform moisture content throughout the layer shall be required. Should the material be too wet to permit proper compaction or rolling, all work on all portions of the embankment thus affected shall be delayed until the material has dried to the required moisture content. Sprinkling shall be done with approved equipment that will sufficiently distribute the water. Sufficient equipment to furnish the required water shall be available at all times. Samples of all embankment materials for testing, both before and after placement and compaction, shall be completed as per Section 202. Based on these test results, corrections, adjustments, and modifications of methods, materials, and moisture content will be made to construct the embankment.

Rolling operation shall be continued until the embankment is compacted to not less than 85 percent of the maximum dry density as determined by ASTM D1557. Under all areas to be paved, the embankment shall be compacted to a density of not less than 90 percent of the maximum dry density with a moisture content falling within plus or minus 3 percent of the optimum moisture as determined by ASTM D1557. On all areas outside of the pavement, curb and gutter, and sidewalk areas, no compaction will be required on the top 4 inches. Any areas inaccessible to a roller shall be consolidated and compacted by mechanical tampers.

In the construction of embankments, starting layers shall be placed in the deepest portion of the fill. As placement progresses, layers shall be constructed approximately parallel to the finished pavement grade line.

When rock and other embankment material are excavated at approximately the same time, all rock shall be stockpiled and removed by the CONTRACTOR. Stones or fragmented rock larger than 2 inches in their greatest dimension will not be allowed in the top 6 inches of the subgrade. Rocks or boulders shall not be disposed of outside of the excavation or embankment areas, except at places and in the manner designated by the ENGINEER.

Frozen material shall not be placed in the embankment nor shall embankment be placed upon frozen material.

The CONTRACTOR shall be responsible for the stability of all embankments made under the contract and shall replace any portion which, in the opinion of the ENGINEER, has become displaced due to carelessness or negligence on the part of the CONTRACTOR. All embankments constructed shall be secured with erosion and sediment control as shown on plans.

There will be no separate measurement or payment for compacted embankment. All costs incidental to placing in layers, compacting, disking, watering, mixing, sloping, and other necessary operations of the embankments will be included in the unit price bid for excavation, borrow, or related bid items.

When stockpiling of excavated material and later rehandling of such material is directed by the ENGINEER in order to produce the specified subgrade structure, the material shall be paid for at the unit price bid per cubic yard (cy) for "Unclassified Excavation."

202-3.8 EQUIPMENT. The CONTRACTOR may use any type of earthmoving, compaction, and watering equipment, provided the equipment is in a satisfactory condition and is of such capacity that the construction schedule can be maintained as planned by the CONTRACTOR, and as approved by the ENGINEER, in accordance with the total days or working days bid for the construction. The CONTRACTOR shall furnish, operate, and maintain such equipment as is necessary to control uniform compaction, layers, section, and smoothness of grade.

202-3.9 PREPARATION AND PROTECTION OF THE TOP OF THE SUBGRADE. On areas to be paved, the specified depth in cut areas and the top of embankment shall be compacted to the density/moisture specified. The typical section for areas to be paved shall be graded such that the roadway is graded as per Standard Plate 200-1. When completed, the surface shall be true to the lines, grades, and cross section shown on the plans, or as directed by the ENGINEER. After all drains, structures, ducts, and other underground appurtenances along the edges or under the pavement have been completed, the subgrade shall be compacted to the depth specified at not less than 90 percent of the maximum dry density with a moisture content falling within plus or a minus 3 percent at the optimum moisture as determined by ASTM D1557. Any irregularities or depressions that develop during rolling shall be corrected by loosening the material at these places and adding, removing, or replacing material until the surface is smooth and uniform. Any portion of the area which is not accessible to a roller shall be compacted in lifts not to exceed 6-inches to the required density/moisture tolerances by approved mechanical tampers. The material shall be sprinkled with water during rolling or tamping, when directed by the ENGINEER.

All soft and yielding material, and material which will not compact readily when rolled or tamped, shall be removed as directed by the ENGINEER and replaced with suitable material. After grading operations are complete, all loose stones larger than 2-inches in their greatest dimension shall be removed from the surface of all proposed graded paving areas and disposed of as directed by the ENGINEER.

At all times, the top of the subgrade shall be kept in such condition that it will drain readily and effectively. In handling materials, tools, and equipment, the CONTRACTOR shall protect the subgrade from damage by laying planks when directed and shall be reshaped and recompacted to required density and moisture tolerances. Storage or stockpiling of materials on the top of the subgrade will not be permitted. Until the subgrade has been checked and approved, no aggregate base, surface course, or pavement shall be laid thereon.

202-3.10 HAUL. No payment will be made separately or directly for haul on any part of the work. All hauling will be considered a necessary and incidental part of the work, and its cost shall be considered by the CONTRACTOR and included in the unit price bid for the pay items of work involved.

202.3.11 TOLERANCES. In those areas upon which an aggregate base or pavement base course is to be placed, the top of the subgrade shall be of such smoothness that, when tested with a 16-foot straightedge applied parallel and at right angles to the centerline, it shall not show any deviation in excess of 1/2 inch, or shall not be more than 0.05 of a foot from true grade as established by grade hubs or pins. Any deviation in excess of these amounts shall be corrected by loosening, adding, or removing materials, and reshaping and recompacting to required density.

On areas to be turfed under the project or in the future, outside the sidewalk, curb and gutter, and pavement limits, the surface shall be of such smoothness that it will not vary more that 0.10 of a foot from true grade as established by grade hubs. Any deviation in excess of this amount shall be corrected by loosening, adding or removing materials, and reshaping.

202-4 MEASUREMENT AND PAYMENT

202-4.1 UNCLASSIFIED EXCAVATION. Unclassified Excavation shall be measured by the cubic yard (CY) in its original position by the method of average end areas of materials acceptably excavated and stripped as specified. Measurements shall not include the yardage of material excavated without authorization beyond normal slope lines, or the yardage of material used for purposes other than those directed. The plans shall state an assumed shrinkage factor to be used to compute embankment volume placed using “Unclassified Excavation.”

Payment shall be made at the unit price bid per cubic yard (CY) for "Unclassified Excavation."

202-4.2 ROCK EXCAVATION. All rock found in the excavation and not allowed to be placed in the backfill or embankment shall be classified as Rock Excavation, measured by the cubic yard (CY) and disposed of by the CONTRACTOR, or as directed by the ENGINEER.

The CONTRACTOR shall place all rocks not allowed to be placed in the backfill or embankment and less than 1 cubic yard in a pile to be measured by the ENGINEER. The total volume of the stockpile shall be reduced by 25 percent to account for voids in the rock stockpile.

All rock greater than 1-cubic yard shall be individually measured by the ENGINEER.

Payment shall be made at the unit price bid per cubic yard (CY) for "Rock Excavation."

202-4.3 BORROW EXCAVATION. Borrow Excavation shall be measured by the cubic yard (CY) in its original position. Borrow Excavation in its original position shall include an assumed shrinkage factor to be used to compute embankment volume placed. Borrow Excavation in a stockpile shall not include an allowance for shrinkage. Payment shall be made at the unit price bid per cubic yard (CY) for "Borrow Excavation."

SECTION 203 – WATERING

203-1 DESCRIPTION

This item shall consist of applying CITY supplied water required in the compaction of embankments, subgrades, aggregate bases, AC base courses, and for other purposes in accordance with the requirements of these specifications, or as directed by the ENGINEER.

This item does not apply to any water required by the CONTRACTOR to meet backfill density requirements in trenching operations or required for establishment of seeding and/or sodding; water required for such operations shall be incidental to other bid items.

203-2 CONSTRUCTION REQUIREMENTS

Water, when required, shall be applied at the locations, in the amounts, and during the hours, including nights, as approved by the ENGINEER. An adequate water supply shall be provided by the CITY OF BISMARCK. The equipment supplied and used by the CONTRACTOR for watering shall be of ample capacity and of such design as to assure uniform application of water in the amounts directed by the ENGINEER.

The CONTRACTOR shall furnish all fittings, hoses, and equipment used in the loading of CITY supplied water. If a water hydrant is used for furnishing water, the CONTRACTOR shall furnish a gate-type control valve, approved by the ENGINEER, to control water flow. The hydrant valve shall be fully opened and under no circumstances will the hydrant valve be used for water flow control. The CONTRACTOR shall apply for a hydrant meter supplied and installed by the City of Bismarck Public Works Department and shall pay all installation and usage fees unless waived by the contract documents.

203-3 MEASUREMENT AND PAYMENT

203-3.1 WATERING. Watering shall be measured in the vehicle at the point of delivery by 1,000 gallon ("M" Gal.) units or by a metered invoice and supplied by the City of Bismarck Public Works Department and paid for at the unit price bid for "Watering." Each project shall be metered independently unless approved prior to project by the ENGINEER.

SECTION 204 – SUBGRADE PREPARATION

204-1 DESCRIPTION

This work shall consist of scarifying, shaping, compacting, and maintaining the subgrade prior to construction of an aggregate base, AC base course, or surface course and shall include excavation and/or shifting of materials resulting from rough grading, trenching, or other prior construction activities. Subgrade preparation shall include all work to the depths specified on the plans or in the special provisions. When subgrade preparation depths are not specified, the depth shall be assumed to be a minimum of 6-inches below the surface of the finished subgrade.

Prior to subgrade preparation, the ENGINEER shall verify the grading is within tolerance specified in Section 202. Work shall not begin on the subgrade preparation until the ENGINEER has approved that the grading has met the tolerances.

"Unstable," "Unsuitable," "Suitable," and "Unsatisfactory" soil or aggregate items are referred to in Section 202.

204-2 CONSTRUCTION REQUIREMENTS

204-2.1 GENERAL. When required to achieve compaction requirements, prior to placing any of the subsequent materials, the entire subgrade surface shall be scarified to a specified depth of not less than 6-inches and meet required moisture and compaction requirements. Excess suitable excavated material shall be stockpiled and reused whenever possible in the project. Stockpiled material which is reused shall be measured in its final section and paid for as “Unclassified Excavation.”

When subgrade preparation without scarification is required to achieve compaction requirements, this item will be paid for under “Subgrade Preparation (0 depth).”

Excavation of material for curb and gutter, or base course installation shall be measured by the cubic yard (CY) and paid for at the unit price bid for “Unclassified Excavation” complete and accepted by the ENGINEER.

Excavation and hauling of material from one point to another point on the roadbed or city rights-of-way to adjust the grade line and stockpiling excess material, if any, adjacent to the project shall be considered incidental to the "Subgrade Preparation" bid items.

All rocks larger than 4 inches in size and other unsuitable material shall be removed and replaced with suitable material. Any portions of the subgrade not easily accessible to machine operations, such as valley gutters, manholes, gate valves, and electrical lines shall be brought to the proper elevation and compacted by methods approved by the ENGINEER.

During the course of preparing the subgrade, and until the curb and gutter and pavement courses have been constructed, it shall be the CONTRACTOR's responsibility to protect the subgrade against, and repair any damage caused by, adverse weather, public traffic, and the CONTRACTOR's operations. The subgrade shall at all times be completed for a sufficient distance ahead of hauling and spreading base or surface material to allow adequate opportunity for inspection. No materials shall be placed on the subgrade until it has been checked and approved by the ENGINEER.

204-2.2 COMPACTION. The subgrade shall be compacted by approved compaction equipment. Approved compaction equipment shall include sheepsfoot rollers, pneumatic packers, mechanical packers, mechanical rammers, and vibratory equipment. Subgrade preparation depths specified on the plans or special provisions or the minimum 6-inches required below the surface of the finished subgrade shall be compacted to 90 percent of maximum dry density as determined by ASTM D1557 with a moisture content falling within plus or minus 3 percent of the optimum moisture content as determined by said testing method. The surface after compaction shall be true to line, grade, and cross section.

The CONTRACTOR shall proof roll the subgrade, including the curb line, with an appropriately weighted truck, and/or a water truck that is filled to 75 percent of capacity. A visual walk through with the ENGINEER shall be performed marking all subgrade failures.

The CONTRACTOR shall then engage an independent soils testing laboratory, approved by the ENGINEER, to determine the soil proctors and perform the required compaction testing to be determined by the ENGINEER.

The compaction control tests for this section are based on (1) individual compaction test per 750 square yards of area. The CONTRACTOR shall be responsible for all retesting of failed tests and a proctor determination to represent each soil condition to be encountered on the project. The locations and depths of compaction testing shall be at the discretion of the ENGINEER during construction. Should it become necessary to require an additional number of initial compaction tests, over and above the number specified for bidding purposes, the City of Bismarck shall be responsible for all costs associated with additional testing performed by an independent testing laboratory. The CONTRACTOR, however, will be required to assume the cost of all retesting of failed tests regardless of the total number required during construction.

Compaction testing to determine densities may be accomplished with a nuclear density testing apparatus and/or the sand cone method. Should disputes arise concerning test results, they will be resolved by using the sand cone method of testing.

Written reports of all test results shall be supplied to the ENGINEER and the CONTRACTOR by the testing laboratory as soon as possible.

Compaction control tests as stated above shall be incidental to the unit price bid for related bid items.

No payment or measurement for payment will be made for suitable materials removed, manipulated, and replaced to obtain density in the specified depth of subgrade preparation. The moisture content of the subgrade materials shall fall within the range of plus or minus 4 percent of the optimum moisture content before any attempt is made to obtain the specified density. Any removal, manipulation, aeration, replacement, watering, and recompaction of suitable materials necessary to obtain the required density shall be considered as incidental to the subgrade preparation operation and shall be performed by the CONTRACTOR at no additional cost to the project.

If the desired compaction cannot be obtained by manipulation, wetting, or drying of the specified depth of the subgrade because the material is found to be "Unsuitable" or "Unsatisfactory," as defined in Section 202, or when the ENGINEER directs manipulation, wetting, or drying below the specified subgrade preparation depth, or when materials below the specified subgrade preparation depth must be removed because they are found to be "Unsuitable," or "Unsatisfactory," thus hampering subgrade operations, this work will be paid for in accordance with Section 104 of said construction specifications unless a "Subcut Excavation" item is included as a bid item on the proposal for the particular unit of the project.

If the instability of suitable materials below the specified subgrade preparation depth is a result of excessive moisture from rains, surface runoff, or frost action, the ENGINEER reserves the right to suspend the work to allow the materials to recover strength or to agree upon another method to use without any liability for the costs that may be claimed by the CONTRACTOR due to the suspension of work. Extension of time, however, will be granted in this case.

204-2.3 TOLERANCES. In those areas upon which an aggregate base, AC base course, or surface course is to be placed, the top of the subgrade shall be of such smoothness that, when tested with a 16-foot straightedge applied parallel and at right angles to the centerline, it shall not show any deviation in excess of 1/2 inch, or shall not be more than 0.05 of a foot from true grade established by grade hubs or pins.

The CONTRACTOR shall perform all surveying required to prepare the subgrade, to the tolerances specified, incidental to other bid items. The CONTRACTOR shall place a survey stake at the crown line on 50-foot intervals on all streets at the elevation approved by the ENGINEER. Additional staking may be required on sharp vertical and horizontal curves and at intersections and valley gutters as determined by the ENGINEER.

Staking shall not be the responsibility of the CONTRACTOR for curb and gutter construction.

204-3 MEASUREMENT AND PAYMENT

204-3.1 SUBGRADE PREPARATION. Subgrade Preparation shall be measured by the square yard (SY) and paid for at the unit price bid for "Subgrade Preparation" complete and accepted by the ENGINEER.

204-3.1A SUBGRADE PREPARATION (1 FOOT DEEP). Subgrade Preparation shall be measured by the square yard (SY) and paid for at the unit price bid for “Subgrade Preparation (1 Foot Deep)” complete and accepted by the ENGINEER.

204-3.1B SUBGRADE PREPARATION (1.5 FEET DEEP). Subgrade Preparation shall be measured by the square yard (SY) and paid for at the unit price bid for “Subgrade Preparation (1.5 Feet Deep)” complete and accepted by the ENGINEER.

204-3.1C SUBGRADE PREPARATION (0 DEPTH). Subgrade Preparation shall be measured by the square yard (SY) and paid for at the unit price bid for “Subgrade Preparation (0 Depth)” complete and accepted by the ENGINEER.

SECTION 205 – EROSION AND SEDIMENT CONTROL

205-1 DESCRIPTION

The CONTRACTOR shall be responsible for installing, maintaining, replacing, and removing all of the erosion and sediment control measures existing, as shown on the plans, or as deemed necessary by the ENGINEER, to effectively control pollution of waterways and sedimentation onto adjacent properties or into any downstream drainage facilities. Installation shall be done in accordance with the North Dakota Department of Health, Division of Water Quality's *Guide to Temporary Erosion Control Measures* or plan details.

CONTRACTOR shall have a copy of the SWPPP, copy of the general permit, and inspection records on-site or at a location immediately available at the construction site at all times.

Erosion and sediment control measures shall be sufficient to contain sediments within the construction limits. If any excavation or embankment material does flow onto adjacent properties or downstream, the CONTRACTOR shall immediately rectify the problem and repair any damages.

Any failure of the erosion and sedimentation control measures shall be repaired within 48 hours of the runoff event, along with any erosion damages, at the CONTRACTOR's expense. The CONTRACTOR shall be required to maintain erosion and sediment control installations until such time as the project is accepted as complete by the ENGINEER, thence notifying and forwarding the responsibility to maintain the erosion and sediment control measures over to the next contractor, developer, or builder/owner.

The CONTRACTOR may request additional compensation for extra clean up or erosion control items, in the event two or more rainfalls occur within 48 hours which overwhelm the normally expected and approved control features causing excessive failures and/or erosion repairs, as directed by the ENGINEER.

If directed by the ENGINEER, the CONTRACTOR shall remove and dispose of erosion control items before the end of the warranty period. Cleanup shall be according to Section 104. All removal and cleanup items shall be considered incidental to other bid items.

205-1.1 PROTECTION OF WATER RESOURCES. The CONTRACTOR shall dispose of all fuels, lubricants, and other organic or inorganic wastes at locations approved by regulatory agencies. Fueling, lubricating, and overhauling of all equipment shall be accomplished at locations, and in such a manner, that contaminants can be controlled and disposed of without polluting surface or subsurface waters.

Surface drainage from cuts and fills within the project limits, whether or not complete, and from borrow and waste disposal areas, shall be held in suitable sedimentation ponds or the site shall be graded to control erosion within acceptable limits. Temporary

erosion and sediment control measures such as berms, dikes, drains, silt fences, bales, wattles, fabrics, and sedimentation basins, if required to meet the above standards, shall be provided and maintained until permanent drainage and erosion control facilities are complete and operative.

The CONTRACTOR shall be required to maintain all excavations, embankments, stockpiles, haul roads, plant sites, waste areas, borrow areas, and all other work areas to be free from dust which would cause a hazard or nuisance to others. The CONTRACTOR must have sufficient, competent equipment on the job to control dust. Dust control will be performed as the work proceeds and whenever a dust nuisance or hazard occurs, or as directed by the ENGINEER.

The CONTRACTOR shall maintain all facilities constructed for pollution control for as long as the operations creating the particular pollutant are being carried out or until the materials of concern become stabilized to the extent that pollution is no longer being created.

205-2 MATERIALS

205-2.1 SILT FENCE WITH WIRE BACKING. Silt fence fabric shall conform to AASHTO M288 silt fence specification. Filter fabric shall be composed of fibers consisting of long chain synthetic polymers composed of at least 95 percent by weight of polyolefins, polyesters, or polyomides. The fibers shall be formed into a network such that the filaments or yarns retain dimensional stability relative to each other. The filter fabric shall be free of any treatment or coating which might adversely alter its physical properties after installation. The fabric shall be free of defects or flaws that affect its physical and/or filtering properties. The fabric shall have a minimum width of 36 inches. The filter fabric shall be furnished with suitable wrapping for protection against moisture and extended ultraviolet exposure prior to placement. Backing for a filter fabric silt fence shall consist of steel wire fence fabric. A woven wire fence shall conform to ASTM A116 Class 1 zinc coating for wire. The woven wire support fence shall be at least 32 inches high with a maximum opening size of 6 inches by 6 inches. The wire shall be a minimum of 14-gauge grade 60.

205-2.2 POSTS. Either wood or steel posts shall be used. Wood posts shall be treated (penta or green treated) and shall be a minimum of 5 feet long with minimum dimensions of 2 inches in diameter for round posts or 1½ inches by 1½ inches for rectangular posts. Steel posts shall be a minimum of 5 feet long, weigh a minimum of 1.3 pounds per square foot, and have projections to aid in fastening the wire or fabric. Steel posts shall also have a metal plate welded near the bottom such that when the post is driven to the proper depth, the plate will be below the ground level for added stability. Installation shall be done in accordance with the North Dakota Department of Health, Division of Water's Quality *Guide to Temporary Erosion Control Measures* or plan detail.

205-2.3 WEIGHTED FIBER ROLL. Weighted fiber roll shall be a photodegradable, extruded netting tube filled with wood curled excelsior and a weighted inner core. The

roll diameter shall be 6 inches and the lengths shall be as required. The weight shall be a minimum of 8⅓ pounds per foot. An adequate number of weighted fiber rolls shall be placed around an inlet to provide complete protection.

205-2.4 EROSION CONTROL BLANKET. The erosion control blanket (ECB) shall be of organic biodegradable mulch material such as straw, wood curled excelsior, coconut fiber, or any combination of these materials. The ECB shall have a consistent thickness of mulch material evenly distributed over the entire area. The ECB materials must be secured on at least one side with netting. The netting must be of photodegradable polypropylene or other plastic material fused to the strand intersections. The ECB shall be a minimum width of 48 inches and shall be weed and pest free.

A. **Wood Excelsior Blanket.** The wood excelsior blanket shall consist of a machine-produced blanket of cured wood excelsior in which 80 percent of the fibers are 6-inches or longer. The wood excelsior blanket shall be smolder-resistant without using additives.

B. **Straw Blanket.** The straw blanket shall consist of a machine-produced, 100 percent weed-free, agricultural straw, certified by an accredited agency, in which 80 percent of the fibers are 3 inches or longer.

C. **Straw and Coconut Blanket.** The straw and coconut blanket shall consist of a machine-produced blanket of 70 percent straw and 30 percent coconut fibers by weight in which 80 percent of the fibers are 3 inches or longer.

EROSION CONTROL BLANKET

TYPE	ECB 1		ECB 2		ECB 3		ECB 4	
	Straw	**Wood**	**Straw**	**Wood**	**Straw/Coconut**	**Wood**	**Coconut**	**Wood**
Material	100% Straw	100% Excelsior Fibers	100% Straw	100% Excelsior Fibers	70% Straw and 30% Coconut Fibers	100% Excelsior Fibers	100% Coconut Fibers	100% Excelsior Fibers
Fiber Length 80% Must be Greater Than	3 inches	80%> 6 inches	3 inches	6 inches	3 inches	80%> 6 inches	3 inches	80%> 6 inches
Min Mass Per Unit Area ASTM D6475	0.5 lbs/sy	0.51 lbs/sy	0.5 lbs/sy	0.51 lbs/sy	0.5 lbs/sy	0.69 lbs/sy	0.5 lbs/sy	0.88 lbs/sy
Min Thickness ASTM D6525	0.25 inch	0.25 inch	0.25 inch	0.25 inch	0.25 inch	0.25 inch	0.25 inch	0.50 inch
Net Opening Minimum	0.5x0.5 inch	0.75x0.75 inch	0.5x0.5 inch	0.75x0.75 inch	0.5x0.5 inch	0.75x0.75 inch	0.6x0.6 inch	0.75x0.75 inch
Max Shear Stress @ 0.50 inches soil loss ASTM D6460	_	1.50 lbs/sy	1.50 lbs/sy	1.75 lbs/sy	1.75 lbs/sy	2.0 lbs/sy	2.25 lbs/sy	2.25 lbs/sy
Slope Gradient Application	≤3H:1V	<3H:1V - 2H:1V	≤2H:1V	2H:1V 1.5H:1V	≤1.5H:1V	≤1.5H:1V	≤1H:1V	≤1H:1V
Net Backing Type	Rapid Photodegradable Polypropylene		Polypropylene		Polypropylene		Black UV Stabilized Polypropylene	
Functional Longevity	≤ 3 months		≤ 12 months		12 to 24 months		> 24 months	
Min Machine Direction Tensile	50 lbs/ft		75 lbs/ft		100 lbs/ft		125 lbs/ft	

Strength ASTM D6818				

The information in this table has been derived from information obtained from the Erosion Control Technology Council. All values must be within (+/-) 10 percent of the minimums shown on the table.

U-shaped wire staples or metal geotextile pins shall be used to anchor the blanket(s) to the ground surface. Wire staples shall be a minimum thickness of 8-gauge. Metal pins shall be at least 0.20-inch diameter steel with 1½-inch steel at the head of the pin. All anchors shall be between 6 to 18 inches long and have sufficient ground penetration to resist pulling out. Longer anchors may be required for loose soils. Heavier metal stakes may be required in rocky soils.

205-2.5 BALE DITCH CHECKS. Bale ditch checks shall be placed in ditches with slopes not exceeding 6 percent. Bale ditch checks shall be constructed of wheat straw, oat straw, prairie hay, or brome grass hay that is free of weeds declared noxious by the North Dakota State Board of Agriculture.

The stakes used to anchor the bales shall be made of hardwood material with the following minimum dimensions: 2 inches by 2 inches square (nominal) by 4 feet long.

Twine shall be used to bind the bales. The use of wire binding is prohibited because it does not biodegrade readily.

205-2.6 ROCK CHECKS. Rock checks shall be placed in ditches with slopes steeper than 6 percent. Rock gradations and size shall be as specified in the plans or by the ENGINEER.

205-2.7 STRAW WATTLES, 9-INCH DIAMETER. Straw wattles shall consist of rice or wheat straw fibers as filler within a containment netting. Filler shall be certified as weed-free. Fibers must have an average length greater than 3 inches and shall contain ultraviolet inhibiters. The strand thickness shall be no less than 0.030 inches, the knot thickness no less than 0.0555 inches, and the netting weight no less than 0.35 ounces per foot. The entire wattle unit shall be sufficiently durable to withstand weather, construction, and installation conditions for at least 3 months, including multiple movements and reinstallations. Wattles shall have a 9-inch diameter (1-inch tolerance) and a minimum unit weight of 1.6 pounds per square foot. Wood posts of sufficient strength to withstand installation and weather shall be used for anchoring. Stakes shall be wooden, 1⅛ inches thick by 30 inches long.

205-2.8 STRAW WATTLES, 12-INCH DIAMETER. Wattles shall consist of rice or wheat straw fibers as filler within a containment netting. Filler shall be certified as weed-free. Fibers must have an average length greater than 3 inches and shall contain ultraviolet inhibiters. The strand thickness shall be no less than 0.035 inches, the knot thickness no less than 0.0555 inches, and the netting weight no less than 0.35 ounces per foot. The entire wattle unit shall be sufficiently durable to withstand weather, construction, and installation conditions for at least 3 months, including multiple

movements and reinstallations. Wattles shall have a 12-inch diameter (1-inch tolerance) and a minimum unit weight of 3.75 pounds per linear foot. Wood posts of sufficient strength to withstand installation and weather shall be used for anchoring. Stakes shall be wooden, 1⅛ inches thick by 30 inches long.

205-2.9 DRAINAGE STRUCTURE INLET FILTER. The drainage structure inlet filter shall be the FLEXSTORM Inlet Filter manufactured by Inlet & Pipe Protection, Inc., or approved equivalent. The inlet filter assembly frame shall be rigid steel and include an overflow feature designed to allow full flow of water into the structure if the filter bag is filled with sediment. The inlet filter assembly bag shall be constructed of polypropylene fabric with a minimum flow rate of 145 gallons per minute per square foot, and designed for a minimum silt and debris capacity of 2 cubic feet.

205-2.10 CONCRETE EROSION CONTROL BLANKET. Prefabricated concrete erosion control blanket shall be Creflex 40F. The concrete erosion control blanket shall be a minimum 40 pounds per square foot with 7-ounce geotextile fabric backing. Concrete used to fabricate the erosion control blanket shall have a compressive strength of 4,000 pounds per square inch.

205-2.11 EROSION CONTROL BERM. Inlet pipes shall be 6-inch PVC and coiled pipes shall be 6-inch perforated pipe. Wire and/or twine shall be used to tie the pipe coils together. Wooden stakes shall be used with a minimum length of 24 inches. Riprap shall consist of rocks with diameters of 9 to 12 inches placed on a woven fabric.

205-3 CONSTRUCTION REQUIREMENTS

205-3.1 GENERAL. The CONTRACTOR shall furnish all labor, materials, and services necessary for and incidental to the completion of all work as shown on the drawings and specified herein. All machinery and equipment owned or controlled by the CONTRACTOR shall be of sufficient size to meet the requirements of the work and shall produce satisfactory work. All work shall be subject to the inspection and approval of the ENGINEER. The CONTRACTOR shall employ at all times a sufficient force of workmen of such experience and ability that the work can be completed in a satisfactory and workmanlike manner.

205-3.2 SILT FENCE WITH WIRE BACKING. The CONTRACTOR shall be responsible to furnish and install silt fence with wire backing as directed by the ENGINEER to effectively control erosion and sedimentation. The CONTRACTOR shall install and maintain silt fence with wire backing by the end of the work day upon notification by the ENGINEER. The CONTRACTOR shall construct silt fences as presented in Standard Detail 205-3. The reuse of silt fence materials without prior approval by the ENGINEER will not be allowed.

The CONTRACTOR shall check the operation and maintenance of the silt fence each week and within 24 hours following rainfall events of 1/2 inch or more until final acceptance of the contract. Rainfall shall be measured on site. The CONTRACTOR

shall be responsible for all maintenance to silt fences. Sediment shall be maintained in such a way that it does not exceed one-third of the silt fence height.

The CONTRACTOR shall remove silt fences as directed by the ENGINEER. This shall include the removal of wire backing, silt fence fabric, and all stakes. All sediment accumulation shall be removed and all excavations shall be backfilled and properly compacted. The site shall be graded to blend with the terrain, and all disturbed areas shall be seeded.

205-3.3 WEIGHTED FIBER ROLL. The CONTRACTOR shall be responsible to furnish and install weighted fiber rolls as directed by the ENGINEER to effectively control erosion and sedimentation. The CONTRACTOR shall install and maintain weighted fiber rolls by the end of the work day upon notification by the ENGINEER. Approximately 3 to 6 inches shall be left between the weighted fiber rolls and the inlet. The ends shall overlap 12 inches.

When silt is one-third the height of the roll, the CONTRACTOR shall remove and dispose of the silt and debris to allow the device to function properly. The CONTRACTOR shall inspect the operation and maintenance of the weighted fiber roll each week and within 24 hours following rainfall events of 1/2 inch or more until final acceptance of the contract, incidental to the price bid for “Weighted Fiber Roll.” Rainfall shall be measured on site.

The CONTRACTOR shall remove fiber rolls as directed by the ENGINEER. Removal shall include any size of fiber roll and shall include removal of all stakes. All sediment accumulation shall be removed, and all excavations shall be backfilled and properly compacted. The site shall be graded to blend with the terrain, and all disturbed areas shall be seeded.

205-3.4 EROSION CONTROL BLANKET. The CONTRACTOR shall be responsible to furnish and install erosion control blankets as directed by the ENGINEER to effectively control erosion and sedimentation. The CONTRACTOR shall install and maintain erosion control blankets by the end of the work day upon notification by the ENGINEER.

The area to be covered shall be properly prepared and seeded before the blanket is applied. All rocks or clods over 1½ inches in diameter and all sticks and other foreign material shall be removed. Blankets shall be rolled out in the direction of the flow. Blanket ends shall be overlapped by a minimum of 1 foot where additional rolls are needed. When implementing multiple blankets, upstream/upslope blankets shall overlap downstream/downslope blankets. Wire staples and metal pins shall be driven flush to the soil surface.

The CONTRACTOR shall inspect the operation and maintenance of the erosion control blankets each week and within 24 hours following rainfall events of 1/2 inch or more until final acceptance of the contract. Rainfall shall be measured on site. Blankets damaged by construction operations shall be repaired by the CONTRACTOR and at the CONTRACTOR’s expense. The area shall be restored to the proper contour, seeded

and fertilized, and re-covered with the same type of erosion control blanket as the one which was damaged.

The CONTRACTOR shall allow erosion control blankets to degrade naturally, unless otherwise specified in plans or by the ENGINEER.

205-3.5 BALE DITCH CHECKS. The CONTRACTOR shall furnish and install bale ditch checks as directed by the ENGINEER to effectively control erosion in channels or ditches with slopes not exceeding 6 percent. The CONTRACTOR shall install and maintain the bale ditch checks by the end of the work day upon notification by the ENGINEER.

Bale ditch checks shall be placed perpendicular to the flow line of the ditch. The ditch check shall extend far enough so that the ground level at the ends of the check is higher than the top of the lowest center bale. This prevents water from flowing around the check.

The following table provides bale ditch check spacing for given ditch grades.

Ditch Check Spacing

Ditch Grade (percent)	Check Spacing (feet)
<1.0	200
2.0	98
3.0	66
4.0	49
5.0	39
6.0	10
>6.0	Do not use bales

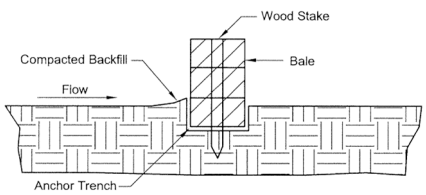

Figure 1-1 - Elevation View - Ditch Installation

Perpendicular to the ditch flow line, excavate a trench 6 inches deep and a bale's width wide. Extend the trench in a straight line along the entire length of the proposed ditch check. Place soil on the upstream side of the trench to save for later use. Place the bales in the trench, making sure they are butted tightly. Two stakes shall be driven through each bale along the centerline of the ditch check, approximately 6 to 8 inches in from the bale ends. Stakes shall be driven a minimum of 18 inches into the ground.

Once all the bales have been installed and anchored, place the excavated soil against the upstream side of the check and compact it. The compacted soil shall be no more than 3 to 4 inches deep and shall extend upstream no more than 24 inches.

The CONTRACTOR shall inspect the operation and maintenance of bale ditch checks each week and within 24 hours following rainfall events of 1/2 inch or more until final acceptance of the contract. Rainfall shall be measured on site. The CONTRACTOR

shall be responsible for all maintenance to bale ditch checks. Sediment shall be maintained in such a way that it does not exceed one-third of the bale height.

The CONTRACTOR shall remove bale ditch checks appropriately after all sediment-producing areas have been stabilized. All sediment accumulation at the barrier(s) shall be removed, and all excavations shall be backfilled and properly compacted. The site shall be graded to blend with the terrain, and all disturbed areas shall be seeded.

205-3.6 ROCK DITCH CHECKS. The CONTRACTOR shall furnish and install rock ditch checks as directed by the ENGINEER to effectively control erosion in channels or ditches with slopes steeper than 6 percent. The CONTRACTOR shall install and maintain the rock ditch checks by the end of the work day upon notification by the ENGINEER.

Rock ditch checks shall be placed perpendicular to the flow line of the ditch. The rock ditch check shall extend far enough that the ground level at the ends of the check is higher than the lowest point on the crest of the check. This prevents water from flowing around the check. The ditch check shall be 18 to 24 inches high with side slopes not steeper than 1:1.

The following table provides rock ditch check spacing for given ditch grades.

Rock Ditch Check Spacing	
Ditch Grade (Percent)	**Check Spacing (Feet)**
4.0	75
5.0	60
6.0	50
7.0	45
8.0	35
9.0	33
10.0	30

The CONTRACTOR shall inspect the operation and maintenance of rock ditch checks each week and within 24 hours following rainfall events of 1/2 inch or more until final acceptance of the contract. Rainfall shall be measured on site. The CONTRACTOR shall be responsible for all maintenance to rock ditch checks. Sediment shall be maintained in such a way that it does not exceed one-third of the rock height.

The CONTRACTOR shall remove rock ditch checks upon stabilization of the site. All sediment accumulated at the barrier(s) shall be removed, and all excavations shall be backfilled and properly compacted. The site shall be graded to blend with the terrain. All disturbed areas shall be seeded following the removal of rock ditch checks.

205-3.7 STRAW WATTLES (9-INCH AND 12-INCH DIAMETER). The CONTRACTOR shall be responsible to furnish and install straw wattles as directed by the ENGINEER to effectively control erosion and sedimentation. The CONTRACTOR

shall install and maintain straw wattles by the end of the work day upon notification by the ENGINEER.

Trenches must be dug to a depth of 3 to 5 inches. Lay the first straw wattle snug into the trench. No daylight shall be seen under the wattles. Pack soil from trenching against the wattle on the uphill side. When installing running lengths of straw wattles, the second wattle shall be installed 9 to12 inches from the first wattle. Do not overlap the ends. Each wattle shall have a minimum of 3 stakes with additional stakes spaced at a minimum of one (1) every 3 feet. Stakes shall not extend more than 2 inches above straw wattle.

The following table provides maximum downslope spacing for various slopes.

Maximum Spacing - Downslope	
9-Inch Diameter Straw Wattles	**12-Inch Diameter Straw Wattles**
1:1 slopes = 10 feet apart	1:1 slopes = 10 feet apart
2:1 slopes = 20 feet apart	2:1 slopes = 20 feet apart
3:1 slopes = 30 feet apart	3:1 slopes = 30 feet apart
4:1 slopes = 40 feet apart	4:1 slopes = 40 feet apart

Adjustments may have to be made for the soil type with approval by the ENGINEER. For soft, loamy soils: adjust the rows closer together. For hard, rocky soils: adjust the rows farther apart.

The CONTRACTOR shall inspect the operation and maintenance of straw wattles each week and within 24 hours following rainfall events of 1/2 inch or more until final acceptance of the contract. Rainfall shall be measured on site. The CONTRACTOR shall be responsible for all maintenance to straw wattles. Sediment shall be maintained in such a way that it does not exceed one-third of the straw wattle height.

The CONTRACTOR shall remove straw wattles appropriately after all sediment-producing areas have been stabilized, or as directed by the ENGINEER. Removal shall include any size of straw wattle and shall include the removal of all stakes. All sedimentation shall be removed, and all excavations shall be backfilled and properly compacted. The site shall be graded to blend with the terrain, and all disturbed areas shall be seeded.

205-3.8 DRAINAGE STRUCTURE INLET FILTER. The CONTRACTOR shall be responsible to furnish and install drainage structure inlet filters as directed by the ENGINEER to effectively control erosion and sedimentation.

The CONTRACTOR shall inspect the operation and maintenance of drainage structure inlet filters each week and within 24 hours following rainfall events of 1/2 inch or more until final acceptance of the contract. Rainfall shall be measured on site. The CONTRACTOR shall be responsible for all maintenance to drainage structure inlet filters. Periodic cleaning of the filter shall be incidental.

The inlet filter assembly shall remain in place until removal is directed by the ENGINEER and shall include the disposal of debris or silt that has accumulated in the bag.

205-3.9 CONCRETE EROSION CONTROL BLANKETS. The CONTRACTOR shall be responsible to furnish and install concrete erosion control blankets to line and grade as shown on the plans or as directed by the ENGINEER to effectively control erosion and sedimentation. Each concrete erosion control blanket panel shall be butted against adjacent panels. The inslopes shall be free of debris and dressed to a smooth, firm surface.

Concrete erosion control blankets shall be anchored as follows:

A. A 6-inch loop is strung around the loops of two mats that are to be anchored together. The 6-inch loop is strung through the eyehole of the anchor and clamped. The driven depth of the anchor shall be 36 to 42 inches deep. Drive the anchor until the top side loops are pulled down into the soil. This provides sufficient tension on the anchor, so if movement of the mats should occur, the anchor will turn and set itself.

B. Each concrete erosion control panel shall be tied together with each adjacent panel at a maximum of 8-foot spacing.

The CONTRACTOR shall inspect the operation and maintenance of concrete erosion control blankets each week and within 24 hours following rainfall events of 1/2 inch or more until final acceptance of the contract. Rainfall shall be measured on site. The CONTRACTOR shall be responsible for all maintenance to concrete erosion control blankets.

The CONTRACTOR shall remove concrete erosion control blankets appropriately after all sediment-producing areas have been stabilized or as directed by the ENGINEER. All sedimentation shall be removed and all excavations shall be backfilled and properly compacted. The site shall be graded to blend with the terrain and all disturbed areas shall be seeded.

205-3.10 EROSION CONTROL BERM. The CONTRACTOR shall be responsible to furnish and install erosion control berms as directed by the ENGINEER to effectively control erosion and sedimentation at curb and road ends. The CONTRACTOR shall construct erosion control berms as per Standard Detail 205-2.

The CONTRACTOR shall inspect the operation and maintenance of erosion control berms each week and within 24 hours following rainfall events of 1/2 inch or more until final acceptance of the contract. Rainfall shall be measured on site. The CONTRACTOR shall be responsible for all maintenance to erosion control berms.

The CONTRACTOR shall remove erosion control berms appropriately after all sediment-producing areas have been stabilized or as directed by the ENGINEER. All

sedimentation shall be removed and all excavations shall be backfilled and properly compacted. The site shall be graded to blend with the terrain, and all disturbed areas shall be seeded.

205-4 MEASUREMENT AND PAYMENT

205-4.1 SILT FENCE WITH WIRE BACKING. Silt Fence With Wire Backing shall be measured by the linear foot (LF) based on one-time installations (i.e., repair and maintenance is incidental) and paid for at the unit price for “Silt Fence With Wire Backing” complete, in place, and accepted by the ENGINEER.

205-4.2 WEIGHTED FIBER ROLL. Weighted Fiber Roll shall be measured by the linear foot (LF) and paid for at the unit price for “Weighted Fiber Roll” complete, in place, and accepted by the ENGINEER

205-4.3 EROSION CONTROL BLANKET TYPE 1. Erosion Control Blanket Type 1 shall be measured by the actual surface area covered to the nearest square yard complete, in place, and accepted by the ENGINEER. No allowance will be made for overlaps and buried blankets or mats. Staples or any other material required to place the material, as specified, will not be measured for payment but shall be included in the price for the pay item. Material that is damaged, wasted, or not properly placed will not be measured for payment.

205-4.4 EROSION CONTROL BLANKET TYPE 2. Erosion Control Blanket Type 2 shall be measured by the actual surface area covered to the nearest square yard complete, in place, and accepted by the ENGINEER. No allowance will be made for overlaps and buried blankets or mats. Staples or any other material required to place the material, as specified, will not be measured for payment but shall be included in the price for the pay item. Material that is damaged, wasted, or not properly placed will not be measured for payment.

205-4.5 EROSION CONTROL BLANKET TYPE 3. Erosion Control Blanket Type 3 shall be measured by the actual surface area covered to the nearest square yard complete, in place, and accepted by the ENGINEER. No allowance will be made for overlaps and buried blankets or mats. Staples or any other material required to place the material, as specified, will not be measured for payment but shall be included in the price for the pay item. Material that is damaged, wasted, or not properly placed will not be measured for payment.

205-4.6 EROSION CONTROL BLANKET TYPE 4. Erosion Control Blanket Type 4 shall be measured by the actual surface area covered to the nearest square yard complete, in place, and accepted by the ENGINEER. No allowance will be made for overlaps and buried blankets or mats. Staples or any other material required to place the material, as specified, will not be measured for payment but shall be included in the price for the pay item. Material that is damaged, wasted, or not properly placed will not be measured for payment.

205-4.7 BALE DITCH CHECK. Bale Ditch Checks shall be measured by the linear foot (LF), and paid for at the unit price bid for "Bale Ditch Checks" complete, in place, and accepted by the ENGINEER.

205-4.8 STRAW WATTLES (9-INCH DIAMETER). Straw Wattles (9-Inch Diameter) shall be paid for by the linear foot (LF) and paid for at the unit price bid for “Straw Wattles (9-Inch Diameter)” complete, in place, and accepted by the ENGINEER.

205-4.9 STRAW WATTLES (12-INCH DIAMETER). Straw Wattles (12-Inch Diameter) shall be paid for by the linear foot (LF) and paid for at the unit price bid for “Straw Wattles (12-Inch Diameter)” complete, in place, and accepted by the ENGINEER.

205-4.10 FIBER ROLL REMOVAL. Fiber Roll Removal shall be measured by the linear foot (LF) and paid for at the unit price bid for “Fiber Roll Removal” complete and accepted by the ENGINEER.

205-4.11 SILT FENCE REMOVAL. Silt Fence Removal (Wired and Regular) shall be measured by the linear foot (LF) and paid for at the unit price bid for “Silt Fence Removal” complete and accepted by the ENGINEER**.**

205-4.12 DRAINAGE STRUCTURE INLET FILTER. Drainage Structure Inlet Filter shall be measured on an individual unit basis (EA) and be paid for at the unit price bid for “Drainage Structure Inlet Filter” complete, in place, and accepted by the ENGINEER

205-4.13 CONCRETE EROSION CONTROL BLANKET. Concrete Erosion Control Blanket shall be measured by the square yard (SY) and paid for at the unit price bid for "Concrete Erosion Control Blanket" complete, in place, and accepted by the ENGINEER. Anchors and installation shall be included in bid for concrete erosion control blanket.

205-4.14 EROSION CONTROL BERM. Erosion Control Berm shall be measured by each (EA) and paid for at the unit price bid for "Erosion Control Berm" complete, in place, and accepted by the ENGINEER. This item to include all items shown on Standard Detail 205-2.

SECTION 300

BASE COURSES

SECTION 301 – SAND SUBBASE

301-1 DESCRIPTION

This item shall consist of sand subbase course constructed on a prepared subgrade or underlying course in accordance with these specifications and in conformity with the dimensions and typical cross section shown on the plans and with the lines and grades established by the ENGINEER.

301-2 MATERIALS

The sand to be furnished under this item shall conform to Subsection 501-2.5 of these specifications.

301-3 CONSTRUCTION REQUIREMENTS

Sand subbase shall be placed, spread, shaped, and compacted prior to the placement of the pavement, sidewalk, curb and gutter, etc. The sand subbase shall be compacted by at least 2 complete passes over the entire width of the forms by a vibratory compactor. Immediately prior to concrete placement, the sand subbase shall be regraded and watered thoroughly to produce a uniform wet appearance.

301-4 MEASUREMENT AND PAYMENT

301-4.1 SAND SUBBASE. Sand Subbase shall be measured by the ton and paid for at the unit price bid for "Sand Subbase." Water used as specified above shall be considered incidental to the "Sand Subbase" item, and separate payment shall not be made for watering.

SECTION 302 – AGGREGATE BASE AND AGGREGATE SURFACE

302-1 DESCRIPTION

This item shall consist of aggregate base and aggregate surface composed of crushed, partially crushed, or uncrushed coarse aggregate bonded with either soil or fine aggregate or both. It shall be constructed on a prepared underlying course in accordance with these specifications and shall conform to the dimensions and typical cross section shown on the plans and with the lines and grades established by the ENGINEER.

302-2 MATERIALS

It shall be the responsibility of the CONTRACTOR to furnish material which, when compacted, will support the construction equipment without showing signs of displacement.

302-2.1 GRADATION. The gradation of the aggregate base and aggregate surface material shall meet the requirements of the gradations given in the following table when tested in accordance with ASTM C136.

Square Mesh Sieve Size	Percent By Weight Passing	Percent By Weight Passing
	Class 5 Aggregate Base	**Class 13 Aggregate Surface**
1”	100	100
3/4“	90-100	70-100
No. 4	35-70	38-75
No. 8	-	22-62
No. 30	16-40	12-45
No. 40	-	-
No. 200	4-10	7-15
P.I.	-	-
L.L.	-	-
% Shale & Rock in Total Sample	12	12
% L.A. Abrasion Loss	50 (max.)	50 (max.)
% Fractured Faces	10 (min.)	10 (min.)

The maximum allowable plasticity index (PI) of aggregate shall be based on the material gradation and computed by the following formula:

Max PI = 10-(percent passing the No. 40 sieve ÷ 10)

The gradations in the table represent the limits which shall determine suitability of aggregate for use from the sources of supply. The final gradations decided on within the limits designated in the table shall be well graded from coarse to fine and shall not vary from the low limit on one sieve to the high limit on the adjacent sieves, or vice versa.

The selection of any of the gradations shown in the table shall be such that the maximum size aggregate used in any course shall not be more than two-thirds the thickness of the layer of the course being constructed.

The source from which the CONTRACTOR proposes to furnish this base material shall be approved prior to hauling to the project.

Testing for gradation shall be performed once per 1,000 tons, with a maximum of one test per day, each test shall consist of three samples, with the final result based on the average of the three samples. Testing for other properties in the above table shall be performed once every 10,000 tons.

Sampling of the final aggregate base and aggregate surface material shall be performed by an independent testing laboratory approved by the ENGINEER to test the composition of the mixtures, the mineral aggregates, and the in-place density of the mixture. Approval or disapproval of the material and reasons therefor will be by written order to the CONTRACTOR over the signature of the CITY ENGINEER.

302-2.2 BLENDED BASE. This item shall consist of a uniformly blended material containing up to 50 percent recycled asphalt by volume with up to 100 percent crushed concrete or Class 5 aggregate. Blended base shall be constructed on a prepared subgrade in conformity with the dimensions and typical section shown on the plans. Blended base shall meet gradation as per Section 302. The blended base shall be deposited, spread, and shaped so the moist and compacted course conforms to the required grade and cross section. The desired degree of compaction will be acceptable when the surface is tightly bound and shows no rutting or displacement under the roller operations.

General. All final combined materials (i.e., blended base) shall meet the following requirements:

Percent by Weight Passing Sieve Size for Blended Base	
1½“	100
1”	90-100
No. 4	35-85
No. 30	16-50
No. 200	0.0-12

302-2.3 MILLING MATERIAL PATCHING. Where an asphalt patch is required, the milling material salvaged on site may be used in conjunction with stabilized gravel base

for backfill in areas of subgrade failures. The milling material in excess of 4 inches by 4 inches will not be allowed for backfilling. In areas where there are no subgrade failures, the milling material shall be stockpiled at locations in need of this material as directed by the ENGINEER.

302-3 CONSTRUCTION REQUIREMENTS

302-3.1 OPERATIONS IN PITS AND QUARRIES. All work involved in clearing and stripping pits and quarries, including handling of unsuitable material, shall be performed by the CONTRACTOR. All material shall be handled in a manner that shall secure a uniform and satisfactory base product. The base course material shall be obtained from sources that have been approved. These operations shall be the responsibility of the CONTRACTOR at no additional cost.

302-3.2 EQUIPMENT. All equipment necessary for the proper construction of this work shall be on the project in proper working condition and approved by the ENGINEER before construction is permitted to start.

302-3.3 PREPARING UNDERLYING COURSE. The underlying course shall be checked and accepted by the ENGINEER before placing and spreading operations are started. Any ruts or soft, yielding places due to improper drainage conditions, hauling, or any other cause shall be corrected and rolled to the required density before the base course is placed thereon.

Grade control between the edges of the pavement shall be accomplished by grade stakes, steel pins, or forms placed in lanes parallel to the centerline of the pavement at intervals sufficiently close that string lines or check boards may be placed between stakes, pins, or forms.

To protect the underlying course and to ensure proper drainage, the spreading of the base shall begin along the centerline of the subgrade on a crowned section or on the high side of the subgrade with a one-way slope.

302-3.4 METHODS OF PRODUCTION

(a) Plant Mix. When provided for in the proposal, or when selected by the CONTRACTOR and approved by the ENGINEER, the aggregate base and aggregate surface material shall be uniformly blended or mixed in an approved plant. The mixing plant shall include bins for storing and batching of the aggregate, pump and tanks for water, and batch mixers of either the pugmill or drum type. All mineral aggregates shall be batched into a mixer by weight. The agitation shall be such that a thorough dispersion of moisture is obtained. The size of the batch and the time of mixing shall be fixed by the ENGINEER and shall produce the results and requirements specified. The base course material produced by combining two or more materials from different sources shall be mixed in a mixing plant described herein. The mixture material shall be at a satisfactory moisture content to obtain maximum density.

(b) Travel Plant. When the use of a travel plant is allowed, the plant shall blend and mix the materials to meet these specifications. It shall accomplish a thorough mixing in one trip. The agitation shall be such that the dispersion of the moisture is complete. The machine shall move at a uniform rate of speed, and this speed shall be regulated to fix the mixing time. If a windrow-type of travel plant is employed for mixing, the aggregate shall be placed in windrows parallel to the pavement centerline. The windrow volume shall be sufficient to cover exact areas planned. The windrow contents shall produce a mixture of the required gradation and bonding qualities. If a travel plant is used which is of the type that mixes previously spread aggregates in place, the material shall have been spread in such thickness and proportions as may be handled by the machine to develop a base course of the thickness of each layer and of the gradation required. With either type of equipment, the mixed material shall be at satisfactory moisture content to obtain the maximum density.

(c) Proportioning or Blending in Place. When the aggregate base and aggregate surface materials are to be proportioned and mixed or blended in place, the different layers shall be placed and spread with the relative proportions of the components of the mixture being designated by the ENGINEER. The aggregate base shall be deposited and spread evenly to a uniform thickness and width. Then the binder or filler shall be deposited and spread evenly over the first layer. There shall be as many layers of materials added as the ENGINEER may direct to obtain required gradation and layer thickness. When the required amount of material has been placed, they shall be thoroughly mixed and blended by means of approved graders, discs, harrows, rotary tillers, or a machine capable of combining these operations, supplemented by other suitable equipment, if necessary. The mixing shall continue until the mixture is uniform throughout and accepted by the ENGINEER. Areas of segregated material shall be corrected by the addition of needed material and by remixing. Water shall be uniformly applied, prior and during the mixing operation, if necessary, to maintain the material at the proper moisture content. When the mixing and blending have been completed, the material shall be bladed and dragged, if necessary, until a smooth uniform surface is obtained, true to line and grade.

(d) Materials of Proper Gradation. When the entire aggregate base and aggregate surface material from coarse to fine is secured in a uniform and well graded condition and contains approximately the proper moisture, such approved material may be handled directly to the spreading equipment. The material may be obtained from gravel pits, stockpiles, or produced from a crushing and screening plant with the proper blending. The materials from these sources shall meet the requirements for gradation, quality, and consistency. The intent of this section of these specifications is to secure materials that will not require further mixing. The base material shall be at satisfactory moisture content to obtain maximum density. Any minor deficiency or excess of moisture may be corrected by surface sprinkling or by aeration. In such instances some mixing or manipulation may be required immediately preceding the rolling to obtain the required moisture content. The final operation shall be blading or dragging, if necessary, to obtain a smooth uniform surface true to line and grade.

302-3.5 METHODS OF SPREADING.

(a) The aggregate base and aggregate surface material that is correctly proportioned or has been processed in a plant shall be placed on the prepared underlying course and compacted in layers of the thickness shown on the plans. The depositing and spreading of the material shall commence where designated and shall progress continuously without breaks. The material shall be deposited and spread in lanes in a uniform layer and without segregation of size to such loose depth that, when compacted, the layer shall have the required thickness. Hauling over the uncompacted base course or subgrade shall not be permitted.

(b) The aggregate base and aggregate surface material that has been processed in a traveling plant or mixed and blended in place shall be spread in a uniform layer of required depth and width and to the typical cross section. The spreading shall be by a self-powered blade grader, mechanical spreader, or other approved method. In spreading, care shall be taken to prevent cutting into the underlying layer. The material shall be bladed until a smooth, uniform surface is obtained, true to line and grade.

(c) The aggregate base and aggregate surface shall be constructed in a layer not more than 9 inches of compacted thickness. The aggregate as spread shall be of uniform grading with no pockets of fine or coarse materials. Any necessary sprinkling shall be kept within 2,000 square yards in advance of the rolling.

When more than one layer is required, the construction procedure described herein shall apply similarly to each layer.

Tests shall be made to determine the maximum density and the proper moisture content of the base material, and this information will be available to the CONTRACTOR and ENGINEER. The base material shall be at a satisfactory moisture content when rolling is started, and any minor variation prior to or during rolling shall be corrected by sprinkling or by aeration, if necessary.

During the mixing and spreading, sufficient caution shall be exercised to prevent the incorporation of subgrade, subbase, or shoulder material in the base course mixture.

302-3.6 FINISHING AND COMPACTING. While spreading, the aggregate shall be thoroughly compacted by rolling. The rolling shall progress gradually from the sides to the center of the lane under construction, or from one side toward previously placed material by lapping uniformly each preceding rear wheel track by one-half the width of such track. Rolling shall continue until the entire area of the course have been rolled by the rear wheels. The rolling shall continue until the aggregate is thoroughly set, the interstices of the material reduced to a minimum, and until creeping of the material ahead of the roller is no longer visible. Rolling shall continue until the aggregate base and aggregate surface material has been compacted to not less than 95 percent of the maximum dry density at optimum moisture as determined by the compaction control tests specified in ASTM D1557 with a moisture content falling within plus or minus 3

percent of optimum moisture content. Blading and rolling shall be done alternately as required or directed to obtain a smooth, even, and uniformly compacted base.

The course shall not be rolled when the underlying course is soft or yielding or when the rolling causes undulation in the base course. When the rolling develops irregularities that exceed 1/2 inch when tested with a 16-foot straightedge, the irregular surface shall be loosened, refilled with the same kind of material as that used in constructing the course, and rolled again as required.

In areas inaccessible to rollers, the aggregate base and aggregate surface material shall be tamped thoroughly with approved mechanical tampers.

The sprinkling during rolling, if necessary, shall be in the amount and by equipment approved by the ENGINEER.

302-3.7 PROOF ROLL. Before preparations begin for application of a surface treatment or for a surface course, the CONTRACTOR shall proof roll the base, under the supervision of the ENGINEER. The proof roll shall be performed with a minimum gross weight of 44,000 lbs. on a tandem axle truck with four tires per rear axle. Any failing areas in the base shall be the responsibility of the CONTRACTOR to remove and replace, at the discretion of the ENGINEER.

302-3.8 SURFACE TEST. After the course has been completely compacted, the surface shall be tested for smoothness and accuracy of grade and crown. Any portion lacking the required smoothness or failing in accuracy of grade or crown shall be scarified, reshaped, recompacted, and otherwise manipulated as the ENGINEER may direct until the required smoothness and accuracy are obtained. The finished surface shall not vary more than 1/2 inch from a 16-foot straightedge when applied to the surface parallel with and at right angles to the centerline.

302-3.9 THICKNESS. The thickness of the aggregate base and aggregate surface shall be determined by depth tests or cores taken at intervals in such manner that each test shall represent no more than 300 square yards. When the base deficiency is more than 1/2 inch, the CONTRACTOR shall correct such areas by scarifying, adding satisfactory base mixture, rolling, sprinkling, reshaping, and finishing in accordance with these specifications. The CONTRACTOR shall replace at its expense the base material where borings have been taken for test purposes.

302-3.10 PROTECTION. Placement of the aggregate base and aggregate surface shall not take place during freezing temperatures nor when the subgrade is wet. When the aggregates contain frozen materials or when the underlying course is frozen, the construction shall be stopped.

Hauling equipment may be routed over completed portions of the aggregate base and aggregate surface, provided no damage results, and provided that such equipment is routed over the full width of the base course to avoid rutting or uneven compaction. However, the ENGINEER in charge shall have full and specific authority to stop all

hauling over completed or partially completed base course when in his opinion such hauling is causing damage. Any damage resulting to the base course from routing equipment over the base course shall be repaired by the CONTRACTOR at its own expense.

302-3.11 MAINTENANCE. Following the completion of the aggregate base and aggregate surface, the CONTRACTOR shall perform all maintenance work necessary to keep the aggregate base and aggregate surface in a condition satisfactory for priming. After priming, the surface shall be kept clean and free from foreign material. The base course shall be properly drained at all times. If cleaning is necessary, or if the prime coat becomes disturbed, any work or restitution necessary shall be performed at the expense of the CONTRACTOR.

If, during the curing period, the surface of the base dries to the extent that it becomes dusty with consequent loss of binder, it shall be kept moist by sprinkling until such time as the prime coat is applied as directed.

302-3.12 TRUCK SCALES. The aggregate base and aggregate surface shall be weighed on approved scales furnished by the CONTRACTOR or on public scales at the CONTRACTOR's expense. Scales shall be inspected for accuracy and sealed as often as the ENGINEER deems necessary.

302-4 MEASUREMENT AND PAYMENT

302-4.1 CLASS 5 AGGREGATE BASE. Class 5 Aggregate Base shall be measured by the ton (TON) in place and paid for at the unit price bid for “Class 5 Aggregate Base.” This price shall be full compensation for furnishing all materials and for all operations, hauling, and placing of these materials and for all labor, equipment, tools, and incidentals necessary to complete this item.

302-4.2 CLASS 13 AGGREGATE SURFACE. Class 13 Aggregate Surface shall be measured by the ton (TON) in place and paid for at the unit price bid for “Class 13 Aggregate Surface.” This price shall be full compensation for furnishing all materials and for all operations, hauling, and placing of these materials and for all labor, equipment, tools, and incidentals necessary to complete this item.

302-4.3 BLENDED BASE. Blended Base shall be measured by the cubic yard (CY) in place and paid for at the unit price bid for “Blended Base.”

The price shall include supplying recycled asphalt, Class 5 aggregate, crushed concrete, blending, gradation testing, loading, hauling, and placing of the material and for all labor, equipment, tools, and incidentals necessary to complete the item.

302-4.3A BLENDED BASE. Blended Base shall be measured by the ton (TON) in place and paid for at the unit price bid for “Blended Base.”

The price shall include supplying recycled asphalt, Class 5 aggregate, crushed concrete, blending, gradation testing, loading, hauling, and placing of the material and for all labor, equipment, tools, and incidentals necessary to complete the item.

302-4.4 MILLING MATERIAL PATCHING. The milling material for patches shall be measured in place and paid for by the ton (TON) at the unit price bid for "Milling Material Patching."

302-4.5 WATERING. Water used under this item shall be in accordance with and paid for under Section 203.

SECTION 304 – AC STABILIZED BASE

304-1 DESCRIPTION

This item shall consist of a base course composed of mineral aggregate and bituminous material, mixed in a central mixing plant, and placed on a prepared subgrade in accordance with these specifications and in conformity with the dimensions and typical cross sections shown on the plans and with lines and grades established by the ENGINEER.

The base course shall be constructed as shown on the plans in lifts not to exceed 3 inches in thickness. The 3-inch maximum lift thickness will be waived if the CONTRACTOR is able to demonstrate by means of a test section that compaction, texture, and surface tolerance can be obtained for a thicker lift. If the result of the test is satisfactory, the ENGINEER will authorize the CONTRACTOR in writing to construct the thicker lift.

304-2 MATERIALS

All materials shall meet requirements of Section 401, except as follows:

304-2.1 RECYCLED ASPHALT PAVEMENT. Section 304 AC Stabilized Base and Section 401 AC Patch, Leveling, and Surface Courses shall allow reclaimed or recycled asphalt pavement (RAP) up to 20 percent of the mixture. A job mix formula shall be submitted for approval prior to use of each mixture supplied for the project. At least 70 percent of the total asphalt binder in the surface course shall be virgin material. Maximum particle size on RAP introduced into the cold feed shall be 1½ inches. Undesirable particles such as joint sealant or marking tape shall be removed from the pavement. The quantity of the asphalt binder in RAP, incorporated into the mix, will be included in the quantity of asphalt binder used. Any cost for virgin oil shall be included in the bid price of the mixture.

304-3 COMPOSITION OF MIXTURE

The mineral aggregate for the base course shall shall meet all requirements as per Section 401-3.

304-4 EQUIPMENT

All equipment shall meet requirements of Section 401.

304-5 CONSTRUCTION REQUIREMENTS

All construction requirements shall meet Section 401, except as follows:

304-5.1 WEATHER LIMITATIONS. The base course shall be constructed only when the surface is dry, the subgrade is not frozen, the atmospheric temperature is above

30°F, and the weather is not foggy or rainy. The temperature requirement may be waived, but only when so directed by the ENGINEER.

304-5.2 SPREADING AND LAYING

No mixture shall be placed when the air temperature away from the artificial heat is 30°F or lower, unless so directed by the ENGINEER.

Machine spreading requirements shall meet Sub Section 401-5.6 (c)

304-6 MEASUREMENT AND PAYMENT

304-6.1 AC STABILIZED BASE (CLASS). The AC Stabilized Base material shall be measured by the ton of bituminous mixture and paid for at the unit price bid for "AC Stabilized Base (Class)" complete, in place, and accepted by the ENGINEER. No deduction will be made for the weight of the asphalt cement in the mixture. Batch weights will not be permitted for method of measurement. Asphalt Cement shall be paid per Subsection 401-6.4 “Asphalt Cement” pay item.

SECTION 400

FLEXIBLE PAVEMENT

SECTION 401 – ASPHALTIC CONCRETE PAVEMENT

401-1 DESCRIPTION

This item shall consist of an AC patch, leveling, base course and/or surface course composed of mineral aggregate and bituminous material, mixed in a central mixing plant and placed on a prepared subgrade, aggregate base or AC base course in accordance with these specifications and in conformity with the dimensions and typical cross sections shown on the plans and with the lines and grades established by the ENGINEER.

The AC base course shall be constructed as shown on the plans in lifts not to exceed 3 inches in thickness. The AC patch, leveling, and/or surface course shall be constructed as shown on the plans in lifts not to exceed 2½ inches in thickness. The maximum lift thickness will be waived if the CONTRACTOR is able to demonstrate by means of a test section that compaction, texture, and surface tolerance can be obtained for a thicker lift. If the result of the test is satisfactory, the ENGINEER will authorize the CONTRACTOR in writing to construct the thicker lift.

All NDDOT tests per this specification shall follow the NDDOT Field Sampling and Testing Manual with the following exceptions: all testing procedures shall be done by an independent testing laboratories per Section 104 and testing frequency shall be as described in the following specifications.

401-2 MATERIALS

401-2.1 AGGREGATE. The aggregate shall consist of crushed stone, crushed gravel, gravel, sand gravel, sand, crushed sand, or other natural granular and approved material which has essentially the same qualities and meets all requirements when combined within the limits for gradation.

The aggregate shall be tough, durable, sound, and shall consist of angular fragments reasonably uniform in density and quality. The aggregate shall be free of soil, roots, and other organic matter. The physical characteristics and quality of the materials shall be conditionally approved by the ENGINEER, in stockpile, at the plant site.

Aggregate (fine and coarse) shall be sampled in accordance with NDDOT ND T 27 for Sieve Analysis of Fine and Coarse Aggregate and NDDOT ND T 11 for Materials Finer than No. 200 Sieve in Mineral Aggregates by Washing.

The final gradations decided on within the limits designated in the table shall be well graded from coarse to fine and shall not vary from the low limit on one sieve to the high

limit on the adjacent sieves or vice versa. Aggregate shall meet the following requirements.

Sieve Size	1/2 Inch Nominal Maximum Aggregate Size[1] Percent Passing	
	Min.	Max.
5/8 Inch	100	100
1/2 Inch	90	100
#4	40	70
#30	15	35
#200	2.0	7.0
[1]Nominal aggregate size is defined as one (1) sieve size larger than the first sieve to retain more than ten percent.		

Test Method	Test Name	Criteria
NDDOT ND T 176	Plastic Fines in Graded Aggregates and Soils by Use of the Sand Equivalent Test	40% min.
NDDOT ND D 4791	Test Method for Flat Particles, Elongated Particles, or Flat Elongated Particles in Coarse Aggregate	10% max.
AASHTO T 96	Standard Method of Test for Resistance to Degradation of Small-Size Coarse Aggregate by Abrasion and Impact in the Lox Angeles Machine	40% max.
NDDOT ND T 113	Lightweight Pieces in Virgin Aggregate	5.0% max.

401-2.2 BITUMINOUS MATERIAL. Unless otherwise specified, the bitumen shall be PG 58-28 or PG 58S-28 performance-graded asphalt cement or as approved by the ENGINEER. A certificate of asphalt cement material shall be submitted for each mixture supplied, for each load of asphalt cement delivered to the hot mix plant.

The percent by weight for the bituminous material shall be within the limits given. The bituminous content of the mixture shall be calculated on a percentage basis by weight of the total mix. The percentage of bituminous material by weight to be added to the aggregate shall be on the basis of preliminary laboratory tests and field sieve analysis.

The asphalt cement shall conform to ASTM D946 and shall be mixed at a temperature falling within the range of 250°F to 325°F.

401-2.3 SUPERPAVE MIX PROPERTIES

The superpave mix properties shall meet the following requirements. The fine aggregate angularity (FAA) shall be based on the designation of the bid item.

Property	FAA 40	FAA 41	FAA 42	FAA 43	FAA 44	FAA 45
Fractured Particles in Coarse Aggregate Angularity (min)	75%	75%	75%	75%	85%	85%
Fine Aggregate Angularity (min)	40%	41%	42%	43%	44%	45%
Gyratory Effort, # of Gyrations	N_{ini} = 7, N_{des} = 75, N_{max} = 115					
Voids filled with Bitumen	65-78%	65-78%	65-78%	65-78%	65-75%	65-75%
%G_{mm} @ N_{ini} (max)	90.5%	90.5%	89%	89%	89%	89R

Methods for Determining Superpave Mix Properties	
Test Method	**Property**
NDDOT 4	Fractured Particles in Coarse Aggregate Angularity
NDDOT ND T 304	Fine Aggregate Angularity
AASHTO R 35	Gyratory Effort, # of Gyrations
AASHTO M 323, NDDOT T 166	Voids filled with Bitumen
AASHTO M 323, NDDOT T 166	%G_{mm} @ N_{ini}

401-2.3 RECYCLED ASPHALT PAVEMENT. Bituminous mixture shall allow reclaimed or recycled asphalt pavement (RAP) up to 20 percent of the mixture. A mix design shall be submitted for approval prior to use of each mixture supplied for the project. At least 70 percent of the total asphalt binder in the AC surface course shall be virgin material. Maximum particle size on RAP introduced into the cold feed shall be 1½ inches. Undesirable particles such as joint sealant or marking tape shall be removed from the pavement. The quantity of the asphalt binder in RAP, incorporated into the mix, will be included in the quantity of asphalt binder used. Any cost for virgin oil shall be included in the bid price of the mixture.

401-2.4 MIX DESIGN. The CONTRACTOR shall submit, for the ENGINEER's written approval, a mix design for each mixture to be supplied for the project a minimum of 10 calendar days before beginning paving operations. The mix design with the allowable tolerances shall be within the master range specified for the particular type of bituminous material. The job mix formula for each mixture shall establish a single percentage of aggregate passing each required sieve size and a single percentage of bituminous material to be added to the aggregate.

When making the blend determinations for the mix design, the average of the production samples vales for each sieve from each stockpile shall be used.

The mix design shall be based on the criteria specified in the following table and developed in accordance with the standards outlined below.

Test Method	Property/	Criteria
AASHTO M 323 NDDOT ND T 166	Voids in Mineral Aggregate	14.0 min. for 1/2 inch nominal maximum aggregate
AASHTO M 323 NDDOT ND T 166	% G_{min} @ N_{max}	98.0 Maximum
AASHTO M 323 NDDOT ND T 166	Dust/Effective Asphalt Ration	0.6 – 1.3 (AC Surface coarse) 0.6 – 1.4 (AC Base coarse)
AASHTO T 283 AASHTO R 30	Desired Moisture Sensitivity, min. % Strength Retention[1, 2]	70 @ 7.0 ± 1% Air Voids
Determined by ND DOT mix design program	Asphalt Film Tickness[1] (microns)	7.5 – 13
[1]Desired value, the Department will make a final determination based on the mix design [2]Only required when specified on the Plans		

Test Method	Test Name
NDDOT ND T 312	Preparing and Determining the Density of Hot Mix Asphalt (HMA) specimens by Means of the Superpave Gyratory Compactor
AASHTO R 35	Practice for Superpave Volumetric Design for Hot Mix Asphalt
AASHTO R 30	Mix Conditioning of Hot Mix Asphalt (HMA)
AASHTO M 323	Specification for Superpave Volumetric Mix Design
NDDOT ND T 166	Bulk Specific Gravity of Compacted Bituminous Mixtures using Saturated Surface-Dry Specimens
NDDOT ND T 209	Theoretical Maximum Specific Gravity and Density of Hot Mix Asphalt

The tabulated composition limits shall govern, but a closer control appropriate to the job materials will be required for the specific project in accordance with the established mix design. The following mix design tolerances shall be applied to the mix design to establish a target value control limit.

Test/Assessment		Test Target Value Control Limit
Asphalt cement (based on totalizer reading)		±0.30
NDDOT ND T 11 and ND T 27	Sieve Analysis of Fine and Coarse Aggregates (control Sieves)	
	1/2 Inch	±6
	#4	±6
	#30	±5
	#200	±2.0
NDDOT ND T 209 and ND T 166	Percent Air Voids	2% to 6%
NDDOT ND T 113	Lightweight Pieces in Virgin Aggregate	Not more than the maximum specified
NDDOT 4	Fractured Particles in Coarse Aggregate Angularity	Not less than the minimum specified
NDDOT ND T 304	Fine Aggregate Angularity	Not less than the minimum specified
NDDOT ND D 4791	Test Method for Flat Particles, Elongated Particles, or Flat Elongated Particles in Coarse Aggregate	Not more than the maximum specified
NDDOT ND T 176	Plastic Fines in Graded Aggregates and Soils by Use of the Sand Equivalent Test	Not less than the minimum specified

Should a change be made in sources of materials, a new mix design shall be established prior to any new materials being used. Should unsatisfactory results or unforeseen conditions make it necessary, a new mix design may be established at the discretion of the ENGINEER.

The mix design for each mixture shall be in effect until modified in writing by the ENGINEER.

The aggregate shall be accepted in stockpile at the plant site. The bituminous material shall be conditionally accepted at the source. The plant mixed material shall be accepted after blending and mixing at the plant.

When directed by the ENGINEER, the gradation of aggregates for AC leveling course, 1-inch or less in thickness, shall have of 100 percent passing the 1/2-inch sieve.

401-4 EQUIPMENT

401-4.1 EQUIPMENT AND ORGANIZATION. All methods and equipment tools, plants, and machinery used for handling materials and executing any part of the work shall be subject to the approval of the ENGINEER before the work is started. If unsatisfactory, they shall be changed and improved as required.

401-4.2 BITUMINOUS MIXING PLANT. GENERAL. Adequate storage space shall be provided to prevent intermingling of the stockpiles containing separated aggregate sizes until the aggregates are delivered into the plant. The various units of the plant shall be designed and coordinated to permit uniform, uninterrupted production under normal operating conditions. The plant shall be provided with means for readily obtaining representative samples and for calibrating and checking the proportions of each ingredient used in the mixture.

(a) Requirements for all Plants. Mixing plants shall be of sufficient capacity and coordinated to adequately handle the proposed bituminous construction.

(1) Plant Scales. Scales shall be accurate to within 0.5 percent of the required maximum load. Poises shall be designated to be locked in any position to prevent unauthorized change of position. In lieu of plant and truck scales, the CONTRACTOR may provide an approved automatic printer system to print the weights of the material delivered, provided the system is used in conjunction with an approved automatic batching and mixing control system. Such weights shall be evidenced by a weigh ticket for each load. Scales shall be inspected and sealed as often as the ENGINEER may deem necessary to assure their continued accuracy. The CONTRACTOR shall have on hand not less than ten (1) 50-pound weights for testing the scales.

(2) Equipment for Preparation of Bituminous Material. Tanks for the storage of bituminous material shall be equipped to heat and hold the material at the required temperatures. Heating shall be accomplished by steam coils, electricity, or other approved means so that flame(s) will not contact the tank. The circulating system for the bituminous material shall be designed to assure proper and continuous circulation during the operating period. Provision shall be made for measuring and sampling storage tanks.

(3) Feeder for Dryer. The plant shall be provided with accurate mechanical means for uniformly feeding the aggregate into the dryer to obtain uniform production and temperature.

(4) Dryer. The plant shall include a dryer(s) which continuously agitates the aggregate during the heating and drying process.

(5) Screens. Plant screens, capable of screening all aggregate to the specified sizes and proportion and having normal capacities in excess of the full capacity of the mixer, shall be provided.

(6) Bins. The plant shall include storage bins of sufficient capacity to supply a mixer operating at full capacity. Bins shall be arranged to assure separate and adequate storage of appropriate fractions of the mineral aggregates. When used, separate dry storage shall be provided for filler or hydrated lime, and the plant shall be equipped to feed such material into the mixer. Each bin shall be provided with overflow pipes of such size and at such location to prevent backup of material into other compartments or bins. Each compartment shall be provided with its own individual outlet gate constructed so as to prevent leakage. The gates shall cut off quickly and completely. Bins shall be so constructed that samples may be obtained readily. Bins shall be equipped with adequate telltale devices which indicate the position of the aggregates in the bins at the lower quarter points.

(7) Bituminous Control Unit. Satisfactory means, either by weighing or metering, shall be provided to obtain the specified amount of bituminous material in the mix. Means shall be provided for checking the quantity or rate of flow of bituminous material into the mixer.

(8) Thermometric Equipment. Dual armored thermometers of adequate range shall be fixed in the bituminous feed line at a suitable location near the charging valve of the mixer unit.

The plant shall also be equipped with an approved thermometric instrument placed at the discharge chute of the dryer to indicate the temperature of the heated aggregates. The ENGINEER may require replacement of any thermometer by an approved temperature recording apparatus for better regulation of the temperature of aggregates.

(9) Truck Scales. The bituminous mixture shall be weighed on an approved scale furnished by the CONTRACTOR or on public scales at the CONTRACTOR's expense. Scales shall be inspected and sealed as often as the ENGINEER deems necessary to assure their accuracy.

(b) Cold Feed Control. The CONTRACTOR may elect to operate the hot plant without plant screens. The basic requirements of this method of operation are to remove all plant screens with the exception of the scalping screen. Permission to continue under this option may be rescinded upon failure to maintain production within the specified gradation limits.

The volume or tonnage placed in each of the two or more stockpiles shall be such a significant portion of the whole tonnage produced as to enable adequate control of the gradation within the job mix formula.

Each individual aggregate shall be fed through a separate feeder that has a positive feed and that can be easily and accurately calibrated. The feed shall be quick adjusting and shall maintain a constant and uniform flow throughout the range of its calibration.

(1) Batch Plants and Continuous Mix Plants. The point of acceptance for the physical properties of the aggregates will be in the stockpiles at the plant site. Acceptance testing for aggregate gradation will be performed just prior to the addition of bituminous material to the mixture.

In batch mix plants, a surge bin shall be provided between the dryer and the batch plant, and the discharge into the weigh hopper shall be from one bin only which shall discharge into the center of the weigh hopper. The amount of aggregate stored in the bin at any one time shall not exceed one batch in weight and shall be fed into the bin in a manner that will prevent sloughing and segregation.

In continuous mix plants, a surge bin and mechanical feeder shall be provided. The storage in each bin used shall be limited in amount so that sloughing and segregation will not occur. If more than one bin is used, separation shall be accomplished in such a manner as to ensure flow to each bin and preclude segregation of the total material as obtained from the individual bins.

(c) Dryer Drum Plants. An approved dryer drum mixing process will be permitted in lieu of pugmill mixing. The system shall provide positive weight control of the cold aggregate feed by use of a belt scale or other device which will automatically regulate the feed gate and permit instant correction of variations in load. The cold feed flow shall be automatically coupled with the bitumen flow to maintain the required proportions. Proportioning shall be within the tolerances specified in the job mix formula. The system shall be equipped with automatic burner controls and shall provide for temperature sensing of the bituminous mixture at discharge.

The moisture contents of the bituminous mixture at discharge from the mixer shall not exceed 3 percent. The temperature of the bituminous mixture at discharge from the mixer shall not exceed 300°F. The temperature of the mix at laydown shall be not less than 225°F. The actual mixing temperature shall be adjusted as directed by the ENGINEER within the allowable limitations to best suit construction conditions.

401-4.3 HAULING EQUIPMENT. Trucks used for hauling bituminous mixtures shall have tight, clean, smooth metal beds which have been lightly coated with a minimum amount of paraffin oil, lime solution, or other approved material to prevent the mixture from adhering to the beds. In adverse weather, each truck shall have a suitable cover to protect the mixture.

401-4.4 BITUMINOUS PAVERS. Bituminous pavers shall be self-contained, power-propelled units, provided with an activated screed or strike-off assembly, heated if necessary. It shall be capable of spreading and finishing courses of bituminous plant mix material which will meet the specified thickness, smoothness, and grade. The paver shall be capable of spreading and finishing courses of bituminous plant mix material in lanes not less than 10 feet in width and shall be capable of operating at forward speed consistent with satisfactory laying of the mixture.

The paver shall have a receiving hopper of sufficient capacity for a uniform spreading operation. The hopper shall be equipped with a distribution system to place the mixture uniformly in front of the screed.

The screed or strike-off assembly shall effectively produce a finished surface of the required evenness and texture without tearing, shoving or gouging the mixture.

401-4.5 ROLLERS. Rollers shall be in good condition, capable of reversing without backlash, and shall operate at slow speeds to avoid displacement of the bituminous mixture. The number, type, and weight of rollers used shall be sufficient to compact the mixture to the required density while the mixture is still in a workable condition. The use of equipment which results in excessive crushing of the aggregate will not be permitted.

401-5 CONSTRUCTION REQUIREMENTS

401-5.1 WEATHER AND SEASONAL LIMITATIONS. The bituminous mix shall be constructed only when the surface is dry, the atmospheric temperature is above 40°F for AC surface course or above 30ºF for AC base course, and the weather is not foggy or rainy. The temperature requirement may be waived, but only when so directed by the ENGINEER.

401-5.2 PREPARATION OF BITUMINOUS MATERIAL. The bituminous material shall be heated to the mixing temperature specified in Subsection 401-2.3 in a manner that will avoid local overheating and provide a continuous supply of the bituminous material to the mixer at a uniform temperature at all times.

401-5.3 PREPARATION OF MINERAL AGGREGATE. The aggregate for the mixture shall be dried and heated at the paving plant before entering the mixer. When introduced into the mixer, the combined aggregate shall not contain more than 0.5 percent moisture. Water in the aggregate shall be removed by heating to the extent that there is no subsequent foaming in the mixture prior to the placing of material. The aggregate shall be heated to a temperature as designated by the mix design within the job tolerance specified. The maximum temperature and rate of heating shall be such that no permanent damage occurs to the aggregates. Particular care shall be taken that aggregates high in calcium or magnesium content are not damaged by heating. The aggregate shall be screened to specified sizes and conveyed into separate bins ready for mixing with bituminous material.

401-5.4 PREPARATION OF BITUMINOUS MIXTURE. Before delivery, the aggregate shall be mixed with the bituminous material at a central mixing plant. The mixture shall be prepared at a temperature as shown in Subsection 401-2.3.

The dry aggregates, prepared as specified in Subsection 401-5.3, shall be combined in the plant in proportionate amounts of each fraction of aggregate required to meet the specified gradation. The quantity of aggregate for each batch shall be determined,

measured, and conveyed into the mixer. In case of volumetric proportioning, the size of the grate openings shall be determined and the gates locked in position.

The bituminous material shall be measured by weight or volume and introduced into the mixer at the specified temperature using the lowest range possible for adequate mixing and spreading. For batch mixers, all mineral aggregates shall be in the mixer before the bituminous material is added.

401-5.5 TRANSPORTATION AND DELIVERY OF THE MIXTURE. The mixture shall be transported from the mixing plant to the point of use in vehicles such as described in Subsection 401-4.3.

The mixture shall be placed at a minimum temperature of 225°F. When mixture is being placed during warm weather, and the ENGINEER has determined that satisfactory results can be obtained at lower temperatures, he may direct that the mixture be mixed and delivered at the lower temperatures.

Loads shall not be sent out so late as to interfere with spreading and compacting the mixture during daylight unless artificial light satisfactory to the ENGINEER is provided. The mixture shall be delivered at a temperature within the tolerance specified in the approved mix design.

401-5.6 SPREADING AND LAYING

(a) Preparation for Placing. Immediately before placing the bituminous mixture, the existing underlying course shall be cleaned of loose or deleterious materials and tacked in accordance with Section 402.

The mixture shall be laid only upon an approved underlying course which is dry and only when weather conditions are suitable. No mixture shall be placed when air temperature away from the artificial heat is 30ºF or lower for AC base course or 40°F or lower for AC surface course, unless so directed by the ENGINEER. The ENGINEER may, however, permit work of this character to continue when overtaken by sudden rains up to the amount which may be in transit from the plant at the time provided the mixture is within the temperature limits specified.

Hauling over material already placed shall not be permitted until the material has been thoroughly compacted as specified and allowed to cool to atmospheric temperature.

(b) Machine Spreading AC Leveling Course. The AC leveling course material that has been processed in a plant shall be placed on the prepared underlying course and compacted in layers of the thickness shown on the plans. The depositing and spreading of the material shall commence where designated and shall progress continuously without breaks. The material shall be deposited and spread in lanes in a uniform layer and without segregation of size to such loose depth that when compacted, the layer shall have the required thickness.

The leveling course material shall be spread in a uniform layer of required depth and width and to the typical cross section. The spreading shall be by a self-powered blade grader, mechanical spreader, or other approved method. In spreading, care shall be taken to prevent cutting into the underlying layer. The material shall be bladed until a smooth, uniform surface is obtained, true to line and grade.

When a self-powered blade grader is used, the policy is to not permit the application of the AC leveling course when the atmospheric temperature is less than 75°F. The self-powered blade grader must also be equipped with radial or smooth tires when used for the application of the AC leveling course.

When the depth leveled is greater than 1 inch, AC surface course shall be applied to a depth within 1 inch or less of finished grade and the remaining portion filled with AC leveling course. The AC leveling course material as spread shall be of uniform grading with no pockets of fine or coarse materials. The material, unless otherwise permitted by the ENGINEER, shall not be spread more than 1,000 square yards in advance of the rolling. Any necessary sprinkling shall be kept within these limits.

When more than one layer is required, the construction procedure described herein shall apply similarly to each layer.

(c) Machine Spreading AC Base and Surface Course. Upon arrival, the AC base or surface course shall be dumped into an approved bituminous paver and immediately spread to the full width required. It shall be struck off in a uniform layer of such depth that when the work is completed, it will have the required thickness and will conform to the grade and surface contour required. The speed of the paver shall be regulated to eliminate the pulling and tearing of the bituminous mat.

The mixture shall be placed in strips of a minimum width of 10 feet. After the first strip or width has been compacted, the second width shall be placed, finished, and compacted in the same manner as the first width. After the second strip has been placed and rolled, a 10-foot straightedge shall be placed across the longitudinal joint to determine if the surface conforms to grade and contour requirements.

Exposed vertical edges of paved strips shall be free of all accumulations of dirt or other foreign material before any mixture is spread in an adjacent lane. If joint faces become dry or dusty, the contact surfaces shall be given a brush coat of asphalt. In lieu of painting the contact surfaces, the CONTRACTOR may use a joint heater approved by the ENGINEER. If the spreading machine should drift from an adjacent lane during construction, the unfilled space shall be carefully filled with fresh hot mixture obtained from trucks or the hopper of the spreading machine. Stealing mixture from that already spread to fill up these areas shall not be permitted.

In limited areas, where due to irregularities or unavoidable obstacles, the use of mechanical spreading and finishing equipment is not practical, the mixture may be hand spread.

When hand spreading is permitted, the mixture shall be dumped on approved dump sheets outside the area upon which it is to be spread and then distributed into place immediately using hot shovels. It shall be spread with hot rakes in a uniformly loose layer to the full width required and of such depth that when the work is completed, it will have the required thickness and will conform to the grade and surface contour shown on the plans.

(d) AC Patch. AC patch cuts will be designated and marked by the ENGINEER. The CONTRACTOR shall make all cuts with a saw or other approved method so as to obtain a vertical face on the remaining asphalt. The cuts shall be made to a depth so as not to disturb the remaining asphalt during removal of the patch area. All sawing, milling, asphalt removal and bituminous tack coat shall be incidental to the unit price bid for “AC Patch”.

The type of failure shall be determined after the asphalt has been removed and the aggregate base or subgrade is inspected. After the aggregate base or subgrade has been inspected, the CONTRACTOR may be required to enlarge the cut area if the aggregate base or subgrade conditions warrant doing so.

Areas of AC pavement, aggregate base or subgrade failures shall be repaired to the following dimensions per Standard Detail 400-1.

AC Pavement Surface Failure

The CONTRACTOR may be required to remove the surface course only in areas of surface failures to a maximum depth of 2 inches or as directed by the ENGINEER. Removal of the pavement failure shall be done by means of a pavement milling machine and in accordance with Subsection 404-4.1 “Milling Pavement Surface.” Milling Pavement Surface shall be incidental to the unit price bit for “AC Patch”.

AC Pavement Failure

- A minimum of 4½ inches deep or the depth of the existing pavement (whichever is greater) or as directed by the ENGINEER.

- Pavement removed shall be done in accordance with Subsection 406-4.1 “Asphalt Removal” and disposed of by the CONTRACTOR. Asphalt removal shall be incidental to the unit price bid for “AC Patch”. Replacement of the patch area shall be done as per Standard Detail 400-1 “AC Pavement Failure” in accordance with Subsection 401-6.3 “AC Patch” and shall be paid for at the unit price bid for “AC Patch”.

- Replacement of the milled area shall be done in accordance with Subsection 401-6.3 “AC Patch” and shall be paid for at the unit price bid for “AC Patch”

Subbase/Subgrade Failure

- Pavement removed shall be made in accordance with Subsection 406-4.1 “Asphalt Removal.” Asphalt removal shall be incidental to the unit price bid for “AC Patch”.

- Excavate to 12 inches minimum or 36 inches maximum depth.

- The excavation shall be done as per Standard Detail 400-1 “Subbase Failure” in accordance with Section 202 “Excavation and Embankments”. The cost of Unclassified Excavation shall be paid for at the unit price bid for “Unclassified Excavation”.

- After excavating the subbase/subgrade failure, the area shall be backfilled with aggregate base, as specified under Section 302, within the pavement thickness to finished grade. Aggregate base shall be paid for at the unit price bid for “Blended Base” or “Class 5 Aggregate Base”.

- The remaining portion of the excavation shall be filled with a minimum of 4½ inches asphalt mix, or the depth of the existing pavement or as directed by the ENGINEER and paid for at the unit price bit for “AC Patch”.

Utility Cut Patch

- Pavement removed shall be made in accordance with Subsection 406-4.1 “Asphalt Removal.” Asphalt removal shall be incidental to the unit price bid for “AC Patch”.

- The excavation shall be done as per Standard Detail 400-1 “Utility Cut Patch” in accordance with Section 801.3. The cost of Unclassified Excavation shall be incidental to related bid items.

- After excavating and backfill of utility trench per Section 801-3, the area shall be backfilled with a minimum of 12 inches of aggregate base, as specified under Section 302, within the pavement thickness to finished grade. Aggregate base shall be paid for at the unit price bid for “Blended Base” or “Class 5 Aggregate Base”.

- The remaining portion of the excavation shall be filled with a minimum of 6 inches of asphalt mix, or the depth of the existing pavement or as directed by the ENGINEER and paid for at the unit price bit for “AC Patch”.

The asphalt pavement of streets which have an asphalt overlay on a concrete base shall be repaired in accordance with AC Pavement Failure to a minimum depth of overlay. When the concrete base requires repair, removal shall be done in accordance with Subsection 602-4.3 “Driveway Removal.” Replacement of the concrete shall be done in accordance with Subsection 602-4.1 “6-Inch Concrete Driveway.” The replacement depth shall be equal to the existing concrete pavement thickness with a minimum thickness of 4 inches.

401-5.7 COMPACTION OF MIXTURES. After spreading, the mixture shall be thoroughly and uniformly compacted with power rollers. Rolling of the mixture shall begin as soon after spreading as it will bear the roller without undue displacement or micro checking.

Initial rolling shall be done longitudinally. The rollers shall overlap on successive trips. Alternate trips of the roller shall be of slightly different lengths, and cross rolling shall not exceed more than one-half the width of the pavement or crowned sections. The speed of the roller shall at all times be slow to avoid displacement of the hot mixture. Any displacement occurring as a result of reversing the direction of the roller or from any other cause shall be corrected at once by rakes and fresh mixture.

Sufficient rollers shall be furnished to handle the output of the plant. Rolling shall continue until all roller marks are eliminated, the surface is of uniform texture and true to grade and cross section, and a density of at least 91 percent of the maximum theoredical density specified in the mix design per Section 401-2 is obtained.

To prevent adhesion of the mixture to the roller, the wheels shall be kept properly moistened, but excessive water will not be permitted.

In areas not accessible to the roller, the mixture shall be thoroughly compacted with hot hand tampers, vibratory plate compactors or approved method.

Any mixtures which become loose and broken, mixed with dirt, or in any way defective prior to the application of the finish coat shall be removed and replaced with fresh hot mixture and immediately compacted to conform with the surrounding area. This shall be done at the CONTRACTOR's expense.

401-5.8 JOINTS

(a) General. The mixture at the joints shall comply with the surface requirements and present the same uniformity of texture, density, smoothness, etc., as other sections of the course. In the formation of all joints, provision shall be made for proper bond with the adjacent course for the specified depth on the course. Joints shall be formed by cutting back on the previous day's run to expose the full depth of the course. The exposed edge shall then be given a coat of tack oil as required by the ENGINEER and the fresh mixture raked against the joint, thoroughly tamped with tampers, and rolled.

(b) Transverse. The placing of the course shall be as continuous as possible. The roller shall pass over the unprotected end of the freshly laid mixture only when discontinuing the laying of the course.

(c) Longitudinal. The placing of the course shall be as specified and in such a manner that the joint is exposed for the shortest period possible. The joint shall be placed so that it will not coincide with that in the AC base course, binder, or existing surface course by at least 1 foot.

401-5.9 SHAPING EDGES. While the surface is being compacted and finished, the CONTRACTOR shall carefully trim the outside edges of the pavement to the proper alignment. The edges so formed shall be beveled while still hot with the back of the rake or a smoothing iron and thoroughly compacted by tampers or by other satisfactory methods.

401-5.10 SURFACE TESTS. Tests for conformity with the specified crown and grade shall be made by the CONTRACTOR immediately after initial compression. Any variation shall be corrected by the removal or addition of materials and by continuous rolling.

The finished surface shall not vary more than 3/8 inch when tested with a 10-foot straightedge applied parallel with or at right angles to the centerline. The surface tolerance for blade laying shall be 3/8 inch in 10 feet.

After the completion of final rolling, the smoothness of the course shall again be tested; the humps or depressions exceeding the specified tolerances or that retain water on the surface shall be corrected immediately as directed by the ENGINEER; this shall be done at the CONTRACTOR's expense.

401-5.11 DENSITY AND TESTING REQUIREMENTS FOR BITUMINOUS PAVEMENTS. The CONTRACTOR shall engage an independent testing laboratory approved by the ENGINEER to test the composition of the mixtures, the mineral aggregates, and the in-place density of the mixture.

(a) Density. AC base and surface course shall be compacted to 91 percent of the maximum theoretical density specified in the mix design per Section 401-2.. The density of the compacted bituminous pavement shall be determined in sublots of 1,500 square yards per each lift.

Each day's haul will be considered a "lot," and each "lot" shall be divided into acceptance sublots not to exceed 1,500 square yards, unless the control strip method outlined below is used. Densities per sublot will be taken at random with a minimum of one (1) nuclear density per sublot, and the mean density in each sublot shall equal or exceed the specified density.
Sublots for AC patch shall not exceed 150 square yards for areas that are a minimum of 4 feet by 4 feet in size. For areas less than 4 feet by 4 feet in size, sublots shall not exceed 75 square yards. Density tests shall be required for AC surface course when the depth leveled is greater than 1 inch. Frequency of tests shall be one (1) per 250 tons AC surface course.

Densities shall be taken by a Nuclear Gauge Tester in accordance with ASTM D2950.

Compaction methods and equipment used shall be approved by the ENGINEER.

During the course of bituminous pavement construction, it may be deemed necessary by the ENGINEER to verify pavement composition and/or the results obtained by the

Nuclear Density Tester. This will be accomplished by removing samples of suitable size from the completed pavement. The CONTRACTOR shall remove the samples and replace the pavement at no extra charge. If the pavement is deficient in composition, compaction, or thickness, satisfactory correction shall be made immediately.

Should the CONTRACTOR require any of the above verification sampling, he may do so provided he agrees to assume all costs incurred including the testing of the sample.

(b) Control Strip Method. If the ENGINEER determines that, through the CONTRACTOR's efforts and the test results, the specified percent of the mix design density cannot be obtained, a control strip shall be used to establish the density criteria for the particular pavement area involved.

The aggregate base or subgrade on which the control strip is to be constructed shall be approved by the ENGINEER prior to the construction of said strip. The ENGINEER may abandon the control strip criteria or require a new control strip when a change in materials or a change in construction methods is observed.

The control strip shall be constructed with blended materials meeting Specifications and approved by the ENGINEER. The control strip shall cover not less than 300 square yards at the specified pavement depth and shall remain in place as part of the completed work.

Compaction of the control strip shall begin as soon as possible after the mixture is placed. Compaction shall be uniform over the entire surface. During compaction, pavement densities will be determined by the CONTRACTOR with a portable nuclear device. When the ENGINEER determines density increases less than 1 pound per cubic foot per roller pass, the rolling shall cease provided a minimum of three (3) roller coverages have been completed. Roller or rollers shall be approved by the ENGINEER. The mean density shall be determined by ten (10) random density tests within the control strip. The control strip density determination shall be the responsibility of the CONTRACTOR.

The remainder of the work in which the control strip is to govern shall be divided into acceptance strips containing no more than 1,500 square yards. The density of each acceptance strip shall be obtained by the results of five (5) nuclear densities, the mean density of which shall not be less than 98 percent of the control strip density accepted by the ENGINEER. No individual test shall be less than 95 percent of the control strip density.

If the mean density of the acceptance strip does not conform to the requirements stated herein, or if an individual test value does not meet the requirements stated herein, the CONTRACTOR shall continue its compactive effort until the required density is obtained.

It is intended that acceptance density testing will be accomplished while the bituminous mixture is hot enough to permit further densification if such is shown to be necessary.

After the required density has been attained in the acceptance strips, further finish rolling may be necessary to remove roller marks or other surface irregularities.

The ENGINEER reserves the right to require testing of individual areas which are apparently defective based upon visual examination and to reject any area that does not have at least 95 percent of the mean density of the control strip.

All other testing shall be in accordance with the standard specifications, the special provisions contained herein, and the project plans.

(c) Testing of Aggregate and Bituminous Mixture. One (1) dry belt sample shall be taken in accordance with NDDOT ND T 2 for each increment of 1,000 tons of bituminous pavement produced with a minimum of one (1) dry belt sample taken and tested per day. The dry sample shall be tested for gradation per NDDOT ND T 27 and fine aggregate angularity per NDDOT ND T 11 in accordance with Section 401-2 of the Standard Specifications. One (1) dry belt sample shall be taken for each increment of 50 tons of AC patch and one (1) for each increment of 100 tons of AC leveling course produced, with a minimum of one (1) dry belt sample taken and tested per day on each material produced.

A minimum of one (1) bituminous mixture sample shall be taken per day in accordance with NDDOT ND T 2 for each increment of 1,000 tons of bituminous pavement produced. The bituminous mixture shall be tested in accordance with Section 401-2 for Theoretical Maximum Specific Gravity NDDOT ND T 209, Bulk Specific Gravity per NDDOT T 116 and Air Voids. The bituminous mixture shall also be tested to determine the bitumen content by extraction in accordance with ASTM D2172. The gradation of the mineral aggregate shall also be determined after the extraction is made. One (1) bituminous mixture sample shall be taken for each increment of 50 tons of AC patch and one (1) for each increment of 100 tons of AC leveling course.

The CONTRACTOR must keep track of daily tonnages of each material produced and a total tonnage to date quantity. . Communication between the CONTRACTOR, testing laboratory, and the CITY is essential. The testing laboratory must be notified at least one (1) hour prior to any paving activities. If the CONTRACTOR's paving activities extend beyond 5:00 p.m., the CITY and the testing laboratory shall be notified prior to 4:00 p.m. that day, and not later than 4:00 p.m. on Friday for any anticipated work on the weekend.

(d) Payment and Reports. The cost of all said testing shall be considered incidental to other bid items.

The time, locations, depths, and frequency of testing shall be at the discretion of the ENGINEER during construction. Should it become necessary to require an additional number of initial tests over and above the frequency specified herein, the CITY OF BISMARCK will assume the responsibility to perform said additional testing, except as outlined herein under "Compaction."

The CONTRACTOR, however, will be required to assume the cost of all testing to determine the limits of an area not meeting specifications and subsequent retesting of said area after corrections have been completed.

Written reports of all results shall be supplied to the ENGINEER and the CONTRACTOR by the testing laboratory as soon as possible. To expedite construction progress, it is necessary that the CONTRACTOR and ENGINEER be furnished with the results of all tests as soon as testing is completed.

The availability of the independent testing laboratory when needed and speed of testing and reporting are to be considered the responsibility of the CONTRACTOR.

401-5.12 BITUMINOUS AND AGGREGATE MATERIAL CONTRACTOR'S RESPONSIBILITY. Samples of the bituminous and aggregate materials that the CONTRACTOR proposes to use, together with a statement of their source and character, shall be submitted to the ENGINEER; approval must be obtained before the use of such material begins. The CONTRACTOR shall require the manufacturer or producer of the bituminous and aggregate materials to furnish material subject to this and all other pertinent requirements of the contract. Only those materials that have demonstrated performance under the proposed design requirements will be accepted.

The ENGINEER or his authorized representative shall have access at all times to all parts of the paving plant for the purpose of inspecting equipment, conditions, and operation of the plant for verification of weights or proportions and character of materials and to determine temperature maintained in the preparation of the mixtures.

The CONTRACTOR shall furnish vendor's certified test reports for each tanker, carload, or equivalent of bitumen shipped to the project. The report shall be delivered to the ENGINEER before permission is granted for use of the material. The furnishing of the vendor's certified test report for the bituminous material shall not be interpreted as a basis for final acceptance. All such test reports shall be subject to verification by testing samples of material received for use on the project.

401-5.13 AC TRANSVERSE CRACK LEVELING. The AC transverse crack leveling is to be applied only to displaced or settled transverse cracks that require leveling. The ENGINEER will mark locations for AC transverse crack leveling. The crack leveling will be completed only after the crack sealing or filling operations are completed. The leveling course shall be applied along the entire crack (if required) with a minimum width of 2 feet or the width of the existing settlement, whichever is greater. A bituminous tack coat must be applied prior to the transverse crack leveling. The material used for AC transverse crack leveling shall be AC leveling course and paid for by “AC Leveling Course”.

401-6 MEASUREMENT AND PAYMENT

401-6.10 thru 6.15 AC LEVELING COURSE (FAA CLASS). The AC Leveling Course material shall be measured by the ton of bituminous mixture and paid for at the unit price bid for "AC Leveling Course (FAA Class)" complete, in place, and accepted by the ENGINEER. No deduction will be made for the weight of the asphalt cement in the mixture. Batch weights will not be permitted for method of measurement.

401-6.20 thru 6.25 AC SUPERPAVE (FAA CLASS). The AC Superpave material shall be measured by the ton of bituminous mixture and paid for at the unit price bid for "AC Superpave (FAA Class)" complete, in place, and accepted by the ENGINEER. No deduction will be made for the weight of the asphalt cement in the mixture. Batch weights will not be permitted for method of measurement.

401-6.30 thru 6.35 AC PATCH (FAA CLASS). The AC Patch material shall be measured by the ton of bituminous mixture and paid for at the unit price bid for "AC Patch (FAA Class)" complete, in place, and accepted by the ENGINEER. No deduction will be made for the weight of the asphalt cement in the mixture. Batch weights will not be permitted for method of measurement.

401-6.4 ASPHALT CEMENT. The Asphalt Cement shall be measured by weighing which shall then be converted to gallons at 60°F based on the unit weight shown on the certified analysis report of each tanker shipped. Payment shall be made at the unit price bid per gallon (GAL) for "Asphalt Cement."

SECTION 402 – BITUMINOUS PRIME OR TACK COAT

402-1 DESCRIPTION

This item shall consist of supplying and applying bituminous material to a previously prepared, bonded, and/or bituminized binder, leveling, or aggregate base course, AC base course or existing pavement in accordance with these specifications and to the width shown on the typical cross section on the plans.

402-2 MATERIALS

402-2.1 QUANTITY OF MATERIAL. The approximate amount of bituminous material per square yard for prime or tack coat shall be as provided in the following table. The exact amount shall be as ordered by the ENGINEER.

Material	Amount
Bituminous Prime Coat	0.25 to 0.05 Gal/SY
Bituminous Tack Coat	0.05 to 0.20 Gal/SY

402-2.2 BITUMINOUS MATERIAL. The types, grades, controlling specifications, and application temperatures for the bituminous materials are shown in the following table. The specific material to be used shall be designated by special provision or by the ENGINEER. The supplier of the bituminous material shall supply asphalt viscosity charts for the material delivered.

PRIME COATS		
Type and Grade	**Specification**	**Application Temperature**
MC-30	ASTM D2027 (MC)	85°F - 140°F
MC 70	ASTM D2027 (MC)	120°F - 175°F

TACK COATS		
Type and Grade	**Specification**	**Application Temperature**
SS-1, SS-1h	ASTM D977	75°F - 130°F
CSS-1h	ASTM D2397	50°F - 130°F

402-3 CONSTRUCTION REQUIREMENTS

402-3.1 WEATHER LIMITATIONS FOR PRIME COAT. The prime coat shall be applied only when the existing surface is dry or contains sufficient moisture to get uniform distribution of the bituminous material when the atmospheric temperature is above 60°F and when the weather is not foggy or rainy. The temperature requirements may be waived, but only when so directed by the ENGINEER.

402-3.2 WEATHER LIMITATION FOR TACK COAT. The tack coat shall be applied only when the existing surface is dry, the weather is not foggy or rainy, and the atmospheric and existing mat temperature is above 40°F. The temperature requirements may be waived, but only when so directed by the ENGINEER with the use of an approved alternate bituminous material.

402-3.3 EQUIPMENT. The equipment used by the CONTRACTOR shall include a self-powered pressure bituminous material distributor and equipment for heating bituminous material.

The distributor shall have pneumatic tires of such width and number that the load produced on the surface shall not exceed 650 pounds per inch of tire width and shall be designed, equipped, and operated so that bituminous material at even heat can be applied uniformly on variable widths of surface at readily controlled rates from 0.05 to 0.5 gallons per square yard. The material shall be applied within a pressure range from 25 to 75 pounds per square inch and with an allowable variation from any specified rate not to exceed 5 percent. Distributor equipment shall include a thermometer for reading temperatures of tank contents, a tachometer, pressure gauges, and volume measuring devices.

402-3.4 APPLICATION OF BITUMINOUS MATERIAL. Immediately before applying the tack or prime coat, the full width of surface to be treated shall be swept with a power broom to remove all loose dirt and other objectionable material.

The application of the bituminous material shall be made by means of a pressure distributor at the pressure, temperature, and in the amounts directed by the ENGINEER.

During all applications, the surfaces at adjacent structures shall be protected in such a manner as to prevent their being spattered, marred, or tacked.

Tack coat shall be applied to all cold joints including concrete edges prior to asphaltic pavement construction.

Following the application, the surface shall be allowed to cure without being distributed for such period of time as may be necessary to permit drying out and setting of the tack or prime coat. This period shall be determined by the ENGINEER. The surface shall then be maintained by the CONTRACTOR until the next course has been placed. Suitable precautions shall be taken by the CONTRACTOR to protect the surface against damage during this interval, including any sand necessary to blot up excess bituminous material.

402-3.5 BITUMINOUS MATERIAL CONTRACTOR'S RESPONSIBILITY. Samples of the bituminous material that the CONTRACTOR proposes to use, together with a statement as to its source and character, must be submitted and approved before use of such material begins. The CONTRACTOR shall require the manufacturer or producer of the bituminous material to furnish material subject to this and all other

pertinent requirements of the contract. Only satisfactory materials so demonstrated by service tests shall be acceptable.

The CONTRACTOR shall furnish vendor's certificate test reports for each carload or equivalent of bituminous material shipped to the project. The report shall be delivered to the ENGINEER before permission is granted for use of the material. The furnishing of the vendor's certified test report for the bituminous material shall not be interpreted as a basis for final acceptance. All such test reports shall be subject to verification by testing samples of material received for use on the project.

402-3.6 FREIGHT AND WEIGH BILLS. Before the final estimate is allowed, the CONTRACTOR shall file with the ENGINEER receipted bills when railroad shipments are made, and certified weight bills when materials are received in any other manner of the bituminous materials actually used in the construction covered by the contract.

Copies of the freight bills and weigh bills shall be furnished to the ENGINEER during the progress of the work.

402.4 MEASUREMENT AND PAYMENT

402-4.1 BITUMINOUS PRIME COAT. Bituminous Prime Coat shall be measured by weighing which shall then be converted to gallons at 60°F based on the unit weight shown on the certified analysis report on each car. Payment shall be made at the unit price bid per gallon (GAL) for "Bituminous Prime Coat" complete, in place, and accepted by the ENGINEER.

402-4.2 BITUMINOUS TACK COAT. Bituminous Tack Coat shall be measured by weighing which shall then be converted to gallons at 60°F based on the unit weight shown on the certified analysis report on each car. Payment shall be made at the unit price bid per gallon (GAL) for "Bituminous Tack Coat" complete, in place, and accepted by the ENGINEER.

SECTION 403 – BITUMINOUS SEAL

403-1 DESCRIPTION

This item shall consist of a bituminous surface treatment as a wearing course composed of single or multiple applications of bituminous material and aggregate cover placed on the prepared and primed base or properly cured wearing surface in accordance with these Specifications and shall conform to the dimensions and typical cross section shown on the Plans and with lines and grades established by the ENGINEER.

403-2 MATERIALS

403-2.1 QUANTITY OF MATERIAL. The amounts of bituminous material, aggregates, and blotter sand per square yard for the bituminous seal shall be determined by the CONTRACTOR as necessary to obtain a finished product in conformity with the plans and specifications.

403-2.2 COVER AGGREGATE. This material shall consist of sound, durable particles of gravel and sand, either crushed or uncrushed or a combination of both, and shall be in accordance with the requirements for gradation shown in the following table:

SEAL AGGREGATE		**BLOTTER SAND**	
Square Mesh Sieve Size	**Percent by Weight Passing**	**Square Mesh Sieve Size**	**Percent by Weight Passing**
1/2”	100	1/2”	
3/8”	95-100	3/8”	100
No. 4	20-85	No. 4	85-100
No. 10	0-12	No. 10	
No. 16		No. 16	40-80
No. 50		No. 50	5-30
No. 100		No. 100	0-10
No. 200	0-4	No.200	
% Shale & Rock in Total Sample	8 (max.)	% Shale & Rock in Total Sample	8 (max.)
% L.A. Abrasion			
Loss	40 (max)		

The aggregate shall be flushed with clear water but not so wet that free water will be draining from aggregate or truck bed before applying.

The sieve analysis will be determined by a wash screening in accordance with ASTM C136.

If bituminous material is changed during construction, the CONTRACTOR shall perform another coating and stripping test prior to utilizing a different cover aggregate blend.

403-2.3 BITUMINOUS MATERIAL. The types, grades, and controlling specifications for the bituminous materials are given below. The bituminous material shall be CRS-2P.

All bituminous materials shall meet the requirements of the latest version of the North Dakota Department of Transportation Standard Specifications for Road and Bridge Construction, Section 818. The CONTRACTOR may submit a bituminous material not contained in the above list to the ENGINEER, and the ENGINEER may approve or deny the use of the proposed bituminous material.

403.3 CONSTRUCTION REQUIREMENTS

403-3.1 WEATHER LIMITATIONS. Bituminous material shall not be applied to a wet surface or during sand or dust storms.

In general, it will be the policy not to permit the application of any bituminous material when the atmospheric temperature is less than 70°F and not be anticipated to drop below 35°F within the 24 hour cure time. The CONTRACTOR must delay the application of bituminous material until the atmospheric and pavement surface conditions are satisfactory. No bituminous material shall be placed which cannot be cared for during daylight hours. Materials not placed in compliance with this section will not be paid for.

Seal coats shall not be applied after August 15 of any calendar year except by written or email permission of the CITY ENGINEER.

403-3.2 EQUIPMENT AND ORGANIZATION. Each unit required in the execution of these specifications shall be under the continuous supervision of a competent superintendent thoroughly experienced in this type of work. Experienced operators will be required on all equipment used in hauling and applying bituminous material and aggregates.

All equipment necessary to perform this work properly shall be on the project in proper working condition before construction is permitted to start. The CONTRACTOR shall furnish, while applying the seal coat, all barricades, lights, flagmen, or other traffic control devices as necessary to protect crews, equipment, and the public from damage.

The following equipment will be the minimum required for this type of construction, and additional machinery shall be secured if in the opinion of the CONTRACTOR it is necessary to fulfill the conditions of these specifications or to complete the item within the time specified:

(a) The distributor shall have pneumatic tires of such width and number that the load produced on the pavement surface shall not exceed the legal gross vehicle weight, and

it shall be designed and operated so that bituminous material at even heat may be applied uniformly on variable widths of surface at readily controlled rates from 0.05 to 2.0 gallons per square yard.

(b) The mechanical spreader shall be capable of depositing the designated amount of aggregate in a smooth, uniform layer or on the freshly deposited bitumen and in such a manner that the wheels of the equipment will not contact any bitumen which has not been covered by the aggregate. The rate of aggregate discharge shall be uniform over the full application width, and whenever necessary, cut-off plates or other approved means shall be provided to reduce the width of spread in suitable increments to meet the job requirements. The spread shall be so adjusted by individual gates over the wheel tracks to allow additional aggregate to be deposited to prevent tracking by the spreader and the trucks.

(c) The blotter sand spreader shall be capable of spreading a thin, uniform layer of sand such as a mechanical truck-mounted type.

(d) The self-propelled pneumatic roller shall consist of pneumatic tires arranged in a manner to provide a satisfactory compacting unit. The roller shall have an effective rolling width of at least 60 inches and shall give a compression of at least 275 pounds per inch of tread width when fully loaded. The wheels shall be staggered on the front and rear axles to provide complete coverage of the area over which the roller travels.

The CONTRACTOR shall have a minimum of two self-propelled pneumatic rollers available. The rollers shall be the self-propelled type capable of starting, stopping, and reversing direction smoothly, without jerking or backlash, and shall be equipped with positive, accurate steering control.

(e) A power broom or power blower, broom dragging equipment, and equipment for heating aggregate shall be included, when needed.

The CONTRACTOR shall supply such auxiliary equipment as needed.

Bituminous binder and aggregate shall not be spread over a greater yardage than can be rolled and finished in one day's operation.

403-3.3 APPLICATION OF BITUMINOUS MATERIAL. Bituminous material shall be applied upon the properly prepared surface at the rate and temperature selected by the CONTRACTOR using a distributor to obtain uniform distribution at all points. The yardage over which the binder is spread in advance of placing the aggregate shall be as determined by the CONTRACTOR. During all applications, the surfaces of the adjacent structures, including curbs, shall be protected in such a manner as to prevent their being splattered, marred, or damaged in any other manner. Splatters shall be removed and mars repaired at the CONTRACTOR’s expense. Coverage shall be complete, uniform, and free of “drilling” or “streaking.”

The bituminous material shall not be applied to a dusty surface. If normal sweeping methods do not remove dust, the surface shall be flushed with water incidental to this bid item. If water is taken from CITY hydrants, see Section 203. All water shall be incidental to the bituminous seal coat.

A construction joint shall be placed at the start or stop of seal operations which will be continued from or to the joint. This also includes at concrete valley gutters. After the asphalt is applied, the building paper shall be removed and disposed of by the CONTRACTOR.

Aggregates and bituminous mat shall not be allowed to cover any appurtenances such as manhole covers, valve box covers, and valley gutters.

The spray bar shall be shut off instantaneously at each intersection joint to ensure a straight line and the full application of asphalt binder up to the joint.

A hand spray shall be used to apply asphalt binder necessary to touch up all spots missed or inaccessible by the distributor.

The longitudinal joint between the asphalt and the concrete gutter must be included when the bitumen is applied. A maximum overspray of 1 inch will be allowed on the concrete gutter. All vegetation and loose debris shall be removed from the longitudinal joint prior to the bitumen application.

The bitumen shall be applied so that when covered, transverse and longitudinal joints of successive applications will not result in ridges or depressions and will be smooth and consistent with the adjacent surface of the completed treatment.

403-3.4 APPLICATION OF AGGREGATE MATERIAL - GENERAL METHODS. The CONTRACTOR shall determine when to place the cover aggregate on the applied bituminous material. The timing of when the cover aggregate is placed on the applied bituminous material varies with the type and grade of bituminous material. The CONTRACTOR shall perform test strips and include this timing parameter. Cover aggregate shall be spread uniformly over the bituminous material with the aggregate equipment specified. Trucks spreading aggregate shall be operated backward so that the bituminous material will be covered before the truck wheels pass over it. The aggregate shall be spread in the same width of application as the bituminous material and shall not be applied in such thickness as to cause blanketing. Backspotting or sprinkling of additional aggregate material and spraying additional bituminous material over areas that show up having insufficient cover of bitumen shall be done by hand whenever necessary. Additional spreading of aggregate material shall be done by means of a broom drag or other approved method.

Pneumatic rollers shall be used immediately after the aggregate is spread. The blotter sand shall be applied as necessary, and rolling shall be continued until no more aggregate material can be worked into the surface. Further brooming and rolling on the strip being placed on adjacent strips previously placed shall be done as often as

necessary to keep the aggregate material uniformly distributed. These operations shall be continued until the surface is evenly covered and cured. Roller shall not be of such weight which crushes the aggregate particles.

Succeeding applications shall not be applied until the preceding application has set and excess aggregate has been removed. If dust, dirt, or other foreign matter accumulates on the surface between the applications, the CONTRACTOR shall be required to sweep and clean the surface as specified herein. The bituminous material and the aggregate shall be spread upon the clean and properly cured surface and handled as required. Extreme care shall be taken in all applications to avoid brooming or tracking dirt or any foreign matter on any portion of the pavement surface under construction. Traffic shall be signed for a restricted speed limit of 15 miles per hour during the rolling and for 24 hours after the rolling has been completed. The CONTRACTOR may sign the streets for No Parking provided the City of Bismarck Traffic Engineer approved signs are placed 24 hours or more prior to the beginning of operations. The CONTRACTOR must document daily which streets are signed and during what time period. The CONTRACTOR must also notify the Police Department, Fire Department, and ambulance service prior to street closures.

It shall be the CONTRACTOR's responsibility to contact the Police Department about vehicles that are in violation of the 48-hour parking restriction.

Coordination between the CONTRACTOR and the Police Department is essential. The CONTRACTOR shall notify the Police Department at least two (2) hours before vehicles need towing, so the Police Department has adequate time to make arrangements.

No towing of vehicles shall be permitted unless authorized by the Police Department.

Signs shall be removed within 24 hours after rolling is complete or whenever construction operations cease for more than 24 hours, except as directed by the ENGINEER. A recommended No Parking sign is on file at the Engineering Department.

A small crew and proper equipment shall be available to control bleeding of seal oil for a period of 30 days after the date of application. If bleeding occurs during the maintenance period and after final sweeping, the CONTRACTOR shall control bleeding by spreading light coats of blotter sand, which will be paid for under Subsection 403-4.3 "Blotter Sand." Blotter sand shall not be applied in anticipation of bleeding, but only after bleeding actually occurs. The crew and equipment for controlling bleeding shall be available during the 30-day period at all times, including weekends and nights.

Alternate materials, approved by the ENGINEER, may be used as a substitute in lieu of blotter sand to control the bleeding.

All surplus aggregate shall be swept off the surface and removed prior to acceptance of the work. The removal of excess cover aggregate shall be accomplished by the CONTRACTOR using a pickup-type sweeper. Appurtenances such as manhole covers, valve box covers, and valley gutters shall not be covered with the bituminous seal. Any

appurtenance covered shall be cleaned to the satisfaction of the ENGINEER prior to acceptance of the project.

Removal of the excess cover aggregate shall begin 3 days after the seal coat is applied unless a different time is approved by the ENGINEER. The cover aggregate picked up shall become the property of the CONTRACTOR and shall be removed from the project site by the end of each work day. The CONTRACTOR's responsibility for adherence of an acceptable amount of the aggregate in the bituminous material shall not be waived at any time.

403-3.5 CORRECTION OF DEFECTS. Any defects, such as raveling, low centers, lack of uniformity, or other imperfections shall be corrected to the satisfaction of the ENGINEER.

All defective materials resulting from overheating, improper handling, or application shall be removed by the CONTRACTOR and replaced with approved materials as provided for in these specifications.

Damage by a third party, such as vehicle tracking or skidding after the seal coat has been applied and appropriate traffic control measures including flag persons are in place, shall be corrected to the satisfaction of the ENGINEER at the cost of the CITY. All replacement sealing must be done by August 15 of any calendar year except by written permission by the ENGINEER. The replacement of Bituminous Seal Coat damaged by a third party shall be measured in place and paid for by the square yard at unit price bid for "Bituminous Seal Coat." The cost of the original damaged bituminous seal coat will also be paid by the square yard at the unit price for "Bituminous Seal Coat."

403-3.6 BITUMINOUS MATERIAL CONTRACTOR'S RESPONSIBILITY. Samples of the bituminous materials that the CONTRACTOR proposes to use, together with a statement as to their source and character, shall be submitted to the ENGINEER.

The CONTRACTOR shall furnish vendor's certified test reports for each carload, or equivalent, of bitumen shipped to the project. The report shall be delivered to the ENGINEER before permission is granted for use of the material. The furnishing of the vendor's certified test report for the bituminous material shall not be interpreted as a basis for final acceptance nor shall it relieve the CONTRACTOR from responsibility for any failures in the project. All such test reports shall be subject to verification by sample testing. The CONTRACTOR shall provide tests, per the appropriate ASHTO and/or ASTM section, for bituminous material for each 10,000-gallon lot or portion of lot supplied for the project. Tests shall be by an approved independent testing facility. The CONTRACTOR shall provide aggregate gradations for each type of aggregate provided for each 500-ton lot or portion of lot provided for the project. Tests shall be performed by an approved independent testing facility.

403-3.7 TEST SECTION. The CONTRACTOR shall determine an area of suitable size within the project to use to calibrate the equipment and determine the best method of

rolling. It shall be anticipated to have some delays in the operation at this point to evaluate the results. There shall be no additional compensation for these delays.

403-3.8 ACCEPTANCE OF SEAL COAT - WARRANTY. The CONTRACTOR warrants a completed seal coat project that complies with the specifications and that remains in place and performs as intended at the time of acceptance and during the one (1) year warranty period. Compliance with these specifications and/or acceptance of the completed bituminous seal coat for final payment as being constructed in accordance with these specifications does not relieve the CONTRACTOR from the responsibility to repair any portions where the bituminous seal coat has failed or not remained in place during the term of the contract and its one (1) year warranty period. The warranty provided by the CONTRACTOR shall be a “performance warranty” and shall guarantee a completed project in accordance with the plans and specifications at the time of acceptance and final payment and for one (1) year after the time of acceptance and final payment. The CONTRACTOR shall provide this warranty regardless of fault or the cause of such failure except for damage caused by a third party through no fault of the CONTRACTOR. The ENGINEER’s representative and a representative of the CONTRACTOR shall review this project prior to the one (1) year warranty period expiration and determine any areas to be repaired. Acceptance of the project shall be deemed to be “final” at the expiration of the warranty period.

403.4 MEASUREMENT AND PAYMENT

403-4.1 BITUMINOUS SEAL COAT. Bituminous material and cover aggregate shall be measured and paid by the square yard (SY) at the unit price bid for Subsection 403-4.1 “Bituminous Seal Coat" complete, in place, and accepted by the ENGINEER.

403-4.2 BLOTTER SAND. Blotter sand shall be measured by the ton and paid for at the unit price bid for "Blotter Sand" complete, in place, and accepted by the ENGINEER.

SECTION 404 – MILLING PAVEMENT SURFACE

404-1 DESCRIPTION

This work consists of improving the profile, cross slope, and surface texture of an existing pavement surface.

404-2 EQUIPMENT

The equipment for milling and texturing the pavement shall be a power-operated, self-propelled planer or grinder capable of removing pavement surface to the required depth, profile, cross slope, and surface texture. The machine shall be capable of accurately establishing profile grades by reference to the existing pavement or from an independent grade control, and shall positively control the cross slope. The machine shall be of size, shape, and dimensions which do not interfere with safe traffic passage adjacent to the work. The milling head shall have a minimum width of 8 feet. The machine shall have a control system to automatically control the elevation and transverse slope of the milling head. A 15-foot minimum length skid, rolling straightedge, or other approved device shall be used to establish the grade reference for control of the milling head. The system shall permit the grade preference device to operate on either side of the milling machine and shall maintain the desired transverse slope regardless of changes in the elevation of the milling head.

Conveyors capable of side, rear, or rear on front loading shall be provided with the necessary equipment to transfer the milled material from the roadway to a truck.

404-3 CONSTRUCTION REQUIREMENTS

The milling shall be started at the centerline of the pavement and proceed on a longitudinal line parallel to the centerline. Succeeding passes shall progress toward the outer edge of the pavement unless a different sequence of operation is permitted by the ENGINEER. The CONTRACTOR shall make every effort to complete the milling operations on the full width of each street so that it is open to traffic at the end of each day, unless otherwise approved by the ENGINEER. The milled depth shall be gradually tapered to the original pavement surface prior to opening to traffic. Before overlaying, the gradual taper to the original pavement surface shall be milled out transversely to produce a vertical cut.

The completed milled surface shall be free from transverse and longitudinal irregularities exceeding 1/4 inch when measured with a 10-foot straightedge.

In areas that have existing detector loops or microprobes, these loops or probes may be damaged or removed by the milling operations.

The CONTRACTOR shall clean the milled surface by brooming and remove all equipment and materials prior to opening to traffic.

The CONTRACTOR shall salvage the milled material for the CITY and stockpile as indicated on the plans. All equipment necessary for stockpiling milled material will be furnished by the CONTRACTOR.

Machine exhaust shall not damage or scorch any parts of trees.

The CONTRACTOR shall mill around appurtenances such as manhole and valve box castings without removing those appurtenances. If any asphalt remains on the face of the exposed curb and gutter section or radii around appurtenances, it must be removed to a depth of the milled surface. Appurtenances in the driving lanes shall be wedged with asphalt millings which shall be removed prior to the overlay. Appurtenances not wedged shall be marked with a Type II barricade. The measurement and payment will be in conjunction with the milling pavement surfacing.

404-4 MEASUREMENT AND PAYMENT

404-4.1 MILLING PAVEMENT SURFACE. Milling Pavement Surface shall be measured to the nearest 0.1 ton of material weighed and placed in an approved stockpile complete, in place, and accepted by the ENGINEER. Loading, hauling, and stockpiling will not be measured and will be considered incidental to "Milling Pavement Surface." The labor, equipment, brooming, and cleaning before and after milling, water used in milling, and deposit of the milled material in a hauling unit will not be measured for payment, but will be considered incidental to "Milling Pavement Surface."

SECTION 405 – CRACK TREATMENTS

405-1 DESCRIPTION

This work shall consist of applying a crack sealant material into or above existing cracks to prevent the intrusion of water and incompressible material into the cracks and to reinforce the adjacent pavement. There are two methods of crack treatments: crack sealing and crack filling. The ENGINEER shall determine which cracks are candidates for which method of crack treatment.

405-2 METHODS

405-2.1 CRACK SEALING. This method of crack treatment shall be utilized when the crack shows significant signs of vertical or horizontal movement, or where crack edges may exhibit edge deterioration or displacement.

405-2.2 CRACK FILLING. This method of crack treatment shall be utilized when the crack shows very little sign of vertical or horizontal movement.

405-3 MATERIALS

The types of materials essentially comprise three material groups according to their composition and manufacturing process. The principal material groups and types are as follows:

1. Cold-applied thermoplastic bituminous materials.

    a. Liquid asphalt (emulsion).

    b. Polymer-modified liquid asphalt.

2. Hot-applied thermoplastic bituminous materials.

    a. Asphalt cement.

    b. Fiberized asphalt.

    c. Rubberized asphalt.

    d. Low-modulus rubberized asphalt.

3. Chemically cured thermosetting materials.

    a. Self-leveling silicone.

Asphalt cutbacks, mineral-filled asphalts, and sand-asphalt mixtures will not be accepted.

The following table shows the material types that possess most of the above properties. It also shows the recommended application methods and requirements for each type of material used.

Material Type	**Applicable Specifications**	**Recommended Application**
Asphalt Emulsion	ASTM[b] D977, AASHTO[c] M140, ASTM D2397, AASHTO M208	Filling
Asphalt Cement	ASTM D3381, AASHTO M20, AASHTO M226	Filling
Fiberized Asphalt	Manufacturer's recommended specs	Filling
Polymer-Modified Emulsion	ASTM D977, AASHTO M140, ASTM D2397, AASHTO M208	Filling
Asphalt Rubber	State specs, ASTM D5078	Sealing
Rubberized Asphalt	ASTM D1190, AASHTO M173, Fed SS-S-164	Sealing
Low-Modulus Rubberized Asphalt	State-modified ASTM D3405 specs	Sealing
Self-Leveling Silicone	ASTM D5893	Sealing

A. Emulsion and Asphalt Cement Sealants. This material shall be placed flush in an unrouted, non-working crack.

B. Rubberized Asphalt Sealants. This material shall be placed flush or overbanded in routed, working cracks.

C. Self-Leveling Silicone Sealants. This material shall be placed recessed in routed, working cracks.

D. Fiberized Asphalt Sealants. This material shall be placed overbanded in unrouted, working cracks.

405-4 PLACEMENT CONFIGURATION

Sealant and filler materials can be placed in numerous configurations. These placement configurations are grouped into six categories.

1. Flush Fill. This configuration places the material into the existing unrouted crack and the excess material is struck off. Standard Detail 400-2(A) illustrates the flush fill method.

2. Reservoir. This configuration places the material only within the confines of the routed crack. The material placed is either flush with or slightly below the pavement surface. Standard Details 400-2(C) and 400-2(E) illustrate the reservoir-type method.

3. Overband. This configuration places the material into and over an unrouted crack. The excess material shall then be squeegeed to straddle the crack to a minimum width of 1½ inches on either side. Standard Detail 400-2(B) illustrates the overband method.
4. Combination (Reservoir and Overband). This configuration places the material into and over a routed crack. The excess material shall then be squeegeed to straddle the crack to a minimum width of 1½ inches on either side. Standard Details 400-2(D) and 400-2(F) illustrate the combination method.

5. Bond Breaker Material. If the crack continues below the routed crack, a bond breaker material, nonabsorbent closed cell, such as polyethylene foam backer rod, shall be placed at the reservoir bottom of a working crack prior to the sealant application. The backer rod prevents the sealant material from running down into the crack during application. The backer rod material must be a minimum of 25 percent wider than the width of the crack reservoir for it to maintain its vertical position and to provide shape for the material. Standard Details 400-2(E) and 400-2(F) illustrate the placement of the backer rod material.

6. Routed/Sawn Cracks. Working cracks that are relatively straight and are accompanied by edge deterioration are candidates for crack cutting. Crack cutting shall be performed in such a manner so as not to create any additional damage to the existing pavement. High-production machines that follow cracks well and produce minimal spalls or fractures shall be equipped with controls for varying the depth of the cut and the width settings. Standard Details 400-2(C) through 400-2(F) illustrate crack cutting dimensions.

405-5 MATERIALS

The crack sealant compound shall be packaged in sealed containers. Each container shall be clearly marked with the name of the manufacturer, the trade name of the sealant, the type of sealant, the weight, the manufacturer's batch and lot number, the pouring temperature, and the safe heating temperature.

Prior approval of any specific sealant material shall be required before it can be used on the project.

A copy of the manufacturer's recommendations pertaining to the heating and application of the joint sealant material shall be submitted to the ENGINEER before the commencement of work. These recommendations shall be adhered to and followed by the CONTRACTOR. The temperature of the sealer in the field application equipment shall not exceed the safe heating temperature recommended by the manufacturer. Any given quantity of material shall not be heated at the pouring temperature for more than six (6) hours and shall never be reheated. Material shall not be placed if the

temperature is below the manufacturer's recommended minimum application temperature.

Mixing of different manufacturers' brands or different types of sealant shall be prohibited.

Sealant materials may be placed during a period of rising temperature after the air temperature in the shade and away from artificial heat has reached 40°F and indications are for a continued rise in temperature. During a period of falling temperature, the placement of sealant material shall be suspended when the air temperature in the shade and away from artificial heat reaches 40°F. Sealants shall not be placed when the weather or roadbed conditions are unfavorable.

405-6 CRACK TREATMENT PROCEDURES AND EQUIPMENT

The following table shows the required crack treatment equipment characteristics and recommendations.

Operation	Type of Equipment	Recommendations
Crack Cutting (if required)	Vertical-Spindle Router	Use only with sharp carbide-tipped or diamond router bits
	Rotary-Impact Router	Use only with sharp carbide-tipped router bits
	Random Crack Saw	Use only on fairly straight cracks Diamond blade saw, 200-mm maximum diameter
Crack Cleaning/ Drying	Blowers (Backpack & Power-Driven)	**Not recommended** - Insufficient blast velocity (60 to 100 m/s)
	Air Compressor	Equipped with oil and moisture filters Pressure - 690 kPa minimum Flow - 0.07 m^3/s minimum Velocity - 990 m/s minimum
	Hot-Air Lance	Velocity - 610 m/s minimum Temperature - 1370°C minimum No direct flame on pavement <u>Highly Recommended</u> Velocity - 915 m/s minimum Temperature - 1650°C minimum
	Sandblaster	Acceptable air compressor (minimum 690 kPa pressure and 0.07 m^3/s flow) Minimum 25-mm-inside-diameter lines and 6-mm-diameter nozzle
	Wirebrush	Do not use with worn brushes Not recommended for cleaning previously-treated cracks as there is a tendency to smear material
Material	Pour Pots	Not recommended for production operations

Installation	Asphalt Distributor	Not suitable for fiber- or rubber-modified asphalt materials
	Melter-Applicator	Direct-heat kettles not suitable for fiber- or rubber-modified asphalt materials Indirect-heat kettles should be equipped with: * Double-boiler, mechanical agitator with separate automatic temperature controls for oil and melting chamber * Sealant heating range to 230°C * Full-sweep agitator * Accurately calibrated material and heating oil temperature gauges
	Backer Rod Installation Tools	Maintains proper recess Does not damage backer rod
	Silicone Pump & Applicator	Flow Rate - 0.25 L/s minimum Hose line with Teflon; all seals and packing made from Teflon
Material Finishing	Squeegee	Heavy-duty, industrial U- or V-shaped
Blotting (if required)	Paper Wand	To prevent tracking

If tracking of the sealant is present, blotting or tissuing will be required. Blotting may consist of sand limestone dust or crusher dust placed directly on top of the treatment material.

405-7 TRAFFIC CONTROL PLAN AND QUALITY OF DEVICES

The CONTRACTOR shall be responsible for all traffic control devices needed for the completion of the crack treatment operation. Traffic control shall conform to Section 1211.

Traffic Control Devices used on the project will be rated according to the American Traffic Safety Services Association's (ATSSA) *Quality Standards for Work Zone Traffic Control Devices.* The definitions of "acceptable," "marginal," and "unacceptable," and the evaluation guidelines shall be defined in ATSSA's *Quality Standards for Work Zone Traffic Control Devices.*

All traffic control devices shall be retroreflective.

An approved traffic control plan shall be submitted 3 days prior to its use.
Traffic control plan and devices shall be considered incidental to other bid items.
The CONTRACTOR shall broom off the excess debris and remove the traffic control devices after the crack treatment operations are completed.

405-8 MEASUREMENT AND PAYMENT

405-8.1 EMULSION AND ASPHALT CEMENT SEALANTS. The Emulsion and Asphalt Cement Sealants shall be measured by the linear foot (LF) and paid for at the unit price bid for "Emulsion and Asphalt Cement Sealants" complete, in place, and accepted by the ENGINEER.

405-8.2 RUBBERIZED ASPHALT SEALANTS. The Rubberized Asphalt Sealants shall be measured by the linear foot (LF) and paid for at the unit price bid for "Rubberized Asphalt Sealants" complete, in place, and accepted by the ENGINEER.

405-8.3 SELF-LEVELING SILICONE SEALANTS. The Self-Leveling Silicone Sealants shall be measured by the linear foot (LF) and paid for at the unit price bid for "Self-Leveling Silicone Sealants" complete, in place, and accepted by the ENGINEER.

405-8.4 FIBERIZED ASPHALT SEALANTS. The Fiberized Asphalt Sealants shall be measured by the linear foot (LF) and paid for at the unit price bid for "Fiberized Asphalt Sealants" complete, in place, and accepted by the ENGINEER.

405-8.5 BOND BREAKER MATERIAL. Bond Breaker Material shall be measured by the linear foot (LF) and paid for at the unit price bid for "Bond Breaker Material" complete, in place, and accepted by the ENGINEER.

405-8.6 ROUTED/SAWN CRACKS. The Routed/Sawn Cracks shall be measured by the linear foot (LF) and paid for at the unit price bid for "Routed/Sawn Cracks" complete, in place, and accepted by the ENGINEER.

SECTION 406 – ASPHALT REMOVAL

406-1 DESCRIPTION

This work consists of removing, and disposing of, existing AC pavement surfacing.

406-2 EQUIPMENT

The CONTRACTOR shall use a saw, milling wheel, or asphalt cutting wheel to make all pavement cuts. The CONTRACTOR shall furnish all equipment for cutting, removing, loading, and hauling removed asphalt to the designated unloading site.

406-3 CONSTRUCTION REQUIREMENTS

All asphalt cuts shall be made to maintain a vertical face on the remaining asphalt which shall be maintained until the pavement is replaced and accepted by the ENGINEER. Pavement cuts shall be as designated on plans or as marked by the ENGINEER. Any removal and replacement beyond the area specified on plans or marked by the ENGINEER shall be the responsibility of the CONTRACTOR to replace.

Pavement removed shall be salvaged as clean as practical, delivered to the "City of Bismarck Municipal Solid Waste Facility" located east of 52nd Street and north of Divide Avenue, and stockpiled in large piles. It shall be considered incidental to the price bid for "Pavement Removal." Landfill fees shall be waived for clean asphalt.

Protection of adjacent pavements shall be the responsibility of the CONTRACTOR. A mutual inspection of the surrounding pavements shall be made, and any damages shall be repaired by the CONTRACTOR at no additional cost.

406-4 MEASUREMENT AND PAYMENT

406-4.1 ASPHALT REMOVAL. Asphalt Removal shall be measured and paid by the square yard (SY) complete, disposed of properly, and accepted by the ENGINEER. Replacement shall not be part of this bid item.

SECTION 500

RIGID PAVEMENT

SECTION 501 – PORTLAND CEMENT CONCRETE PAVEMENT

501-1 DESCRIPTION

This work shall consist of a pavement composed of air-entrained portland cement concrete, with or without reinforcement as specified, constructed on a prepared subgrade or aggregate base course in accordance with these specifications, and in conformity with the lines, grades, thicknesses, and typical cross sections shown on the plans or established by the ENGINEER.

501-2 MATERIALS

501-2.1 GENERAL. Prior to construction, the CONTRACTOR shall submit for approval by the ENGINEER a certified analysis of materials listed in Subsections 501-2.2, 501-2.2(a), 501-2.7, 501-2.8, 501-2.9, 501-2.10, 501-2.12, and 501-2.13.

501-2.2 PORTLAND CEMENT. The portland cement used in the work shall be Type II or Type II A, meeting the requirements of ASTM C150.

501-2.2a FLY ASH. The CONTRACTOR shall have the option of substituting fly ash for portland cement in the concrete mixture up to a maximum of 25 percent by weight. Each source of fly ash shall be approved by the ENGINEER prior to use. Fly ash shall conform to the requirements of ASTM C311, ASTM C618, and ASTM C684, Class C fly ash, or Class F fly ash. Class C and Class F fly ash chemical and physical specifications shall be as follows:

Chemical Requirements		
	Class C	**Class F**
Silicon dioxide (SiO_2) plus aluminum oxide (Al_2O_3) plus iron oxide (Fe_2O_3), min %	50.0	66.0
Sulfur Trioxide (SO_3), max %	5.0	5.0
Moisture content, max % 3.0	3.0	3.0
Loss on ignition, max %	5.0	5.0
Available alkalies, as Na_2O, max %	1.5	1.5

Physical Requirements		
	Class C	**Class F**
Fineness: Amount retained with wet sieve (No. 325 sieve), max %	34.0	34.0
Pozzolanic activity index: With Portland Cement, at 28 days, min, percent of control	75.0	75.0
Water requirement, max %	105.0	105.0
Soundness: Autoclave expansion or contraction, max %	0.8	0.8
Uniformity requirements: The specific gravity and fineness of individual samples shall not vary from the average established by the 10 preceding test, or by all preceding tests if the number is less than 10, by more than: Specific gravity, max variation from average, %	5.0	5.0
Percent retained on (No. 325) wet sieve, max variation from average	5.0	5.0

Supplementary Optional Physical Requirements		
	Class C	**Class F**
Increase of drying shrinkage of mortar bars at 28 days, max %	0.03	0.03
Uniformity requirements: In addition when air-entraining concrete is specified, the quantity of air-entraining agent required to produce an air content of 18.0 Vol % of mortar shall not vary from the average established by the 10 preceding tests or by all preceding tests if less than 10, by more than, 1%	20.0	20.0
Reactivity with Cement Alkalies: Mortar expansion at 14 days, mix %	100	100

Fly ash that fails to meet the requirement of the tests shall not be used unless specified otherwise by the ENGINEER.

A complete chemical and physical analysis must be submitted to the ENGINEER for approval 14 days prior to use. Also a recent complete chemical and physical analysis shall be submitted each month during its use after approval.

A test result of loss on ignition and amount retained on No. 325 wet sieve must accompany every 25 tons delivered, and these results must be on file at the ready mix producer's office. Random checks and samples shall be taken to ensure testing

accuracy. Any extensive error in test results could cause the material's use to be discontinued.

No fly ash will be allowed which contains oil residue or chemical pollution control contaminates.

Each source of fly ash shall be approved by the ENGINEER prior to use. If more than one source of fly ash is used on a project, each shall be stored and used separately.

Fly ash shall not be substituted for portland cement on any work after September 15 of any calendar year, unless requested by the CONTRACTOR and approved by the ENGINEER.

The ENGINEER shall have the right to sample and test the fly ash as deemed necessary during the course of the construction season. The fly ash shall be tested in accordance with ASTM C311.

501-2.3 AGGREGATE. The CONTRACTOR shall notify the ENGINEER of the source of the coarse and fine aggregate which is proposed for use on the contract. Sufficient time shall be allowed so that sampling and testing can be completed prior to the beginning of construction. During the construction period, the CONTRACTOR shall at all times make available to the ENGINEER the sampling of aggregate. All aggregate shall meet the requirements of these specifications.

501-2.4 COARSE AGGREGATE. Except as noted herein, the coarse aggregate used shall conform to the requirements of ASTM C33, Class 4M. Coarse aggregate shall consist of gravel or broken stone composed of strong, hard, durable, uncoated pebbles or rock fragments washed clean and free from injurious amounts of shale, coal, clay lumps, soft fragments, dirt, glass, organic, or any other deleterious substances.

Coarse aggregate shall be graded from coarse to fine within the limits in the following table, when tested in conformity with ASTM C136. If the coarse aggregate size is not designated in the contract, either gradation may be used, but once adopted, no change in gradation will be made during the course of the work.

COARSE AGGREGATE SIZE		
Sieve Size	**Percent by Weight Passing**	**Percent by Weight Passing**
1½"	100	–
1"	95-100	100
3/4"	–	90-100
1/2”	25-60	–
3/8”	–	20-55
No. 4	0-10	0-10
No. 8	0-5	0-5
No. 200	0-1	0-1
Shale*	0-1	0-1
Iron Oxide, Coal, and Soft particles*	0-5	0-5

*Max. percent by weight of the plus No. 4 fraction.

501-2.5 FINE AGGREGATE. Except as noted herein, the fine aggregate shall conform to the requirements of ASTM C33. Fine aggregate shall be natural sand, consisting of hard, strong, sharp, uncoated grains, free of dust, lumps, mica, shale, organic matter, or other deleterious substances.

Fine aggregate shall be graded within the limits of the following table when tested in conformity with ASTM C136.

FINE AGGREGATE SIZE			
Mortar Sand		**Concrete Sand**	
Square Mesh Sieve Size	**Percent by Weight Passing**	**Square Mesh Sieve Size**	**Percent by Weight Passing**
No. 4	100	3/8”	100
No. 8	95-100	No. 4	95-100
–	–	No. 16	45-80
–	–	No. 50	10-30
No. 100	25 (max.)	No. 100	0-10
No. 200	10 (max.)	No. 200	0.3

The quality, sampling, and testing of mortar sand for use in cement mortar shall conform to ASTM C144.

501-2.6 WATER. Water used in mixing concrete shall be clean and shall not contain deleterious amounts of acids, alkalies, or organic materials. Water shall be subject to test and approval by the ENGINEER.

501-2.7 ADMIXTURES. Substances other than cement, water, aggregates, and air-entraining agents shall not be used in the concrete except as otherwise required or when permitted in writing by the ENGINEER. Air-entraining admixtures shall conform to ASTM C260. Unless otherwise provided in the plans or special provisions, no reduction will be made in the specified cement content of the concrete mixture by reason of using any admixtures. Admixtures containing calcium chloride must be preapproved and conform to ASTM D98. No admixture shall be used which interferes with proper control of the entrained air content of concrete. Permission to use any admixtures may be withdrawn at any time if the properties of the admixture are not uniform or if satisfactory results are not being obtained.

Should the CONTRACTOR request and obtain permission to use admixtures for its own benefit, no additional compensation will be allowed for the cost of furnishing the admixtures and incorporating them into the concrete mixture.

Should the ENGINEER direct the CONTRACTOR to use admixtures when their use is not required by these specifications or by the plans or special provisions, furnishing the admixtures and incorporating them into the concrete mixture will be paid for as extra work as provided in Section 126.

501-2.8 EXPANSION JOINT MATERIAL. Premolded bituminous fiber expansion joint material shall be used in expansion joints and shall consist of preformed strips of one continuous piece per joint which have been formed from cane or other suitable fibers of cellular nature securely bound together and uniformly impregnated with a suitable asphaltic binder. Said joint materials shall conform to ASTM D1751 (premolded material). Closed cell polyethylene expansion joint filler shall conform to ASTM D1056. Expansion joint filler shall be ProFlex vinyl expansion joints from Oscada Plastics, Nomaflex polypropylene joint filler from Nomaco, or approved equivalent, and shall conform to ASTM D1752. The cost for all expansion joint material shall be considered incidental.

501-2.9 JOINT SEALING MATERIAL. Joint sealing material shall conform to the following:

Type of Sealant	**ASTM**
Hot-poured	D6690 Type I, II, and IV
Cold applied elastomeric	C920
Preformed polychloroprene elastomeric	D2628 (6 celled)
Silicone sealant	D5893 Type SL or NDDOT 826.02B Type 5

The cost for joint sealing shall be considered incidental.

501-2.10 REINFORCEMENT STEEL AND DOWEL BARS. Reinforcing steel, except as otherwise specified, shall be Grade 60 or Grade 40 deformed bars epoxy coated (meeting ASTM A775) rolled from take out billet stock and shall conform to the

requirements of ASTM A615. Reinforcing steel shall consist of tie bars and steel used in structural concrete slabs.

Dowel bars shall be intermediate grade plain bars epoxy coated (meeting ASTM A775) rolled from take out billet stock and shall conform to the requirements of ASTM A663 or A675.

Bar supports and spacers shall be constructed of steel and of suitable design and strength to hold reinforcement accurately in place before and during the placing of concrete. Hy-chairs shall be of welded steel construction, and all spacers, bar supports, and chairs shall be approved by the ENGINEER. The cost for all Reinforcement Steel shall be considered incidental.

Tie wire shall be No. 16-gauge annealed wire.

501-2.11 SELECT BACKFILL. The material furnished under this item shall be bedding material in accordance with Subsection 801-2.9 or recycled concrete "readywash" type material and shall be mechanically tamped in place in layers not exceeding 6 inches in depth.

501-2.12 CURING COMPOUNDS. Curing compounds shall conform to ASTM C309, Type 2 white pigmented.

501-3 CONSTRUCTION REQUIREMENTS

501-3.1 GENERAL. The CONTRACTOR shall furnish all labor, materials, and services necessary for and incidental to the completion of all work as shown on the drawings and specified herein. All machinery and equipment owned or controlled by the CONTRACTOR shall be of sufficient size to meet the requirements of the work and shall produce satisfactory work. All work shall be subject to the inspection and approval of the ENGINEER. The CONTRACTOR shall employ at all times a sufficient force of workmen of such experience and ability that the work can be completed in a satisfactory and workmanlike manner.

The CONTRACTOR shall identify an acceptable concrete wash out area(s). Dumping concrete or concrete waste within the CITY's right-of-way or easements including the storm water system or on adjacent properties is prohibited without the written consent of the CITY or the affected property owner.

501-3.2 MATERIALS STORAGE

(a) Portland Cement. Portland cement shall be stored as specified in ASTM C150. The portland cement shall be stored in such a manner as to permit easy access for proper inspection and identification of each shipment and in a suitable weather-tight building that will protect the portland cement from becoming damp and minimize warehouse set. Storage shall be of such capacity to provide ample space for

consignments of cement as may be required to carry on the work in accordance with approved progress schedules.

(b) Aggregates. Aggregates shall be stored in such a manner as to afford good drainage, prevent the intrusion of foreign matter, and preserve the gradation. Any material which has deteriorated or which has been damaged shall not be used for concrete.

To avoid changes in consistency, the aggregates shall be obtained from a source which will ensure uniform quality and grading during any single day's operation, and they shall be delivered to the work and handled in such manner that variations in moisture content will not interfere with the steady production of concrete of uniform quality and consistency.

(c) Fly Ash. Fly ash shall be stored in weather-tight facilities to be approved by the ENGINEER.

501-3.3 ADVANCE DESIGN OF CONCRETE MIXES. Designs and tests for each concrete mix to be used under the contract shall be made using aggregates which have been approved for this work. Except as otherwise specified, mixes shall be designed in accordance with ACI 613 to attain the required strengths using the various slumps (including the maximum allowable), the various size aggregates expected to be used in the work, and the admixtures as called for by the ENGINEER. The concrete mixes shall be designed by an independent testing laboratory as required per Section 104 of these specifications or otherwise approved by the ENGINEER and shall be incidental to other items.

Standard concrete mix shall contain 550-600 pounds of portland cement per cubic yard (CY). High early strength concrete shall contain 650-700 pounds of portland cement per cubic yard (CY).

Advance tests of each of the proposed mixes shall be made in accordance with ASTM C192. A set of six (6) standard 6-inch diameter or a set of six (6) standard 4-inch diameter compression test cylinders shall be made for each mix design. Three (3) cylinders per set shall be tested for compressive strength at 7 days and three (3) cylinders per set shall be tested for compressive strength at 28 days. The high early strength concrete mix design shall have nine (9) standard 6-inch or 4-inch diameter compression test cylinders. Three (3) shall be tested at 3 days, three (3) shall be tested at 7 days, and three (3) shall be tested at 28 days. Concrete tested shall contain all required and/or proposed admixtures and in addition to the testing required by ASTM C192 shall be tested for air content by ASTM C231.

The advance mix designs and the results of tests on cylinders made from advance mix designs are required before work of concrete placing is started. Tests for aggregates as required in Subsection 501-2.4 may be made a part of these tests if suitably referenced on the reports which shall be issued at 7 and 28 days.

Two (2) additional aggregate samples are to be submitted throughout the construction season to an independent testing laboratory and shall be in accordance with Subsections 501-2.4 and 501-2.5.

The above tests shall be repeated if necessary because of changes in materials or unsatisfactory results. The mix design and the advance testing of aggregates specification may be waived at the request of the CONTRACTOR and with the ENGINEER's approval if a mix design approved by the CITY OF BISMARCK is being produced by an established ready mix plant with suitable records of mixes and testing, and if the plant certifies that it will continue to use the same materials involved in the recorded testing. The CONTRACTOR shall pay for all advance design and testing as required per Subsection 501-3.3, including tests for aggregates and flexural strength.

501-3.4 FIELD QUALITY CONTROL. The CONTRACTOR shall engage an independent testing laboratory approved by the ENGINEER to test consistency, proportioning, and strength of the concrete mixture. The CONTRACTOR shall be responsible for scheduling the testing firm. The time and location of testing shall be at the discretion of the ENGINEER. The independent testing laboratory personnel testing in the field shall be responsible for immediately notifying the CONTRACTOR and the ENGINEER in the field of failures. If any tests have not met the specifications, testing shall continue on all batches until the specific ranges have been met and the limits of the area not meeting the requirements are established.

The cost of testing, including retesting of failed tests, shall be considered incidental. All tests requested by the ENGINEER, other than frequencies specified below, shall be considered extra items.

For construction of new concrete pavements, tests shall be taken for each 75 cubic yards (CY).

For new and repaired driveways or sidewalks, tests shall be taken every 60 cubic yards (CY), and no less than two (2) per week or less than 60 cubic yards (CY) utilized.

For new and repaired valley gutters, tests shall be taken for each new valley gutter constructed or a valley gutter repaired in place.

The concrete test shall be taken for each 75 cubic yards of concrete pavement repair material placed, and no less than one (1) per week

One (1) concrete test shall be taken for each 200 linear feet (LF) of repaired curb and gutter placed, not to include through the driveway.

Where less than 1,000 linear feet (LF) of new curb and gutter is placed, one (1) concrete test shall be taken for each side of the street.

Where more than 1,000 linear feet (LF) of new curb and gutter is placed, one (1) test shall be taken for each 1,000 LF of new curb and gutter placed on each side of the street.

A set of three (3) standard 6-inch diameter compression test cylinders shall be cast in the field in accordance with ASTM C31 and C172 for each sample taken. The cylinders cast from the given standard concrete mixtures sample shall be tested in the laboratory, one at 7 days and the remaining two at 28 days with the required minimum strength of the concrete being 3,500 pounds per square inch at 28 days.

If the testing firm chooses to use 4-inch diameter cylinders, a set of four (4) standard 4-inch diameter compression test cylinders shall be cast in the field in accordance with ASTM C31 and C172 for each sample taken. The cylinders cast from the given standard concrete mixtures sample shall be tested in the laboratory, one at 7 days and the remaining three at 28 days with the required minimum strength of the concrete being 3,500 pounds per square inch at 28 days.

High early strength concrete mixtures shall be tested in the laboratory, one at 3 days, one at 7 days, and the remaining one at 28 days for 6-inch cylinders and two at 28 days for 4-inch cylinders.

One (1) additional test cylinder shall be taken during cold weather construction as defined in Subsection 501-3.10. This cylinder shall be cured on the job site under the same conditions as the concrete it represents and tested in the laboratory after 28 days. Each sample taken or cylinders shall also be tested for slump in accordance with ASTM C143 and air content in accordance with ASTM C231.

The maximum allowable slump of the concrete mixture shall be 4 inches unless otherwise approved by the ENGINEER. The air content shall fall within the range of 5 percent to 8 percent. Concrete test specimens for flexural strength shall be made at the discretion of the ENGINEER according to ASTM C31.

Concrete beams shall be tested for minimum flexural strength of 500 psi at 28 days according to ASTM C78. Two (2) concrete beams shall be cast per day or 1,000 centerline feet of new concrete pavement. One (1) concrete beam shall be tested for flexural strength at 7 days and one (1) concrete beam shall be tested for flexural strength at 28 days.

Construction and public traffic shall not be allowed on newly placed concrete pavement until the concrete has attained a minimum compressive strength of 3,000 psi and a minimum flexural strength of 450 psi.

Concrete not meeting required specifications for slump or air content during placement may be accepted or rejected at the discretion of the ENGINEER.

Written reports of all tests shall be supplied to the ENGINEER and the CONTRACTOR by the testing laboratory as soon as possible. To expedite construction, it is necessary

that the CONTRACTOR and ENGINEER be furnished with the results of all tests as soon as testing is completed.

The availability of the independent testing laboratory when needed and speed of testing and reporting are to be considered the responsibility of the CONTRACTOR.

During the course of concrete construction, it may be deemed necessary by the ENGINEER to verify concrete composition and/or thickness. This will be accomplished by coring the completed and in place concrete. The CONTRACTOR shall remove and replace the samples at no extra charge. If the concrete is deficient in composition, compaction, or thickness, satisfactory correction shall be made immediately.

Should the CONTRACTOR require any of the above verification sampling, the CONTRACTOR agrees to assume all costs incurred, including the testing of the sample.

The pavement shall not be opened to traffic prior to 7 days after construction and not before flexural strengths of 450 psi and compressive strengths of 3,000 psi are attained or without approval by the ENGINEER.

501-3.5 PROPORTIONING MATERIALS. Concrete shall be composed of portland cement, fly ash, fine aggregate, coarse aggregate, admixtures, and water as specified. The mix shall be designed in accordance with Subsection 501-3.3 of these specifications.

The amount of water specified shall include the surface moisture carried by the aggregates at the time of mixing. This amount of water shall be determined by tests made by the CONTRACTOR, and the quantity of mixing water to be added to the batch shall be added to that found to be carried by the aggregates to total the rate specified. The number of tests required and the consequent changes in the amount of mixing water to be added will depend on the control exercised in the gradation and moisture contents of the aggregate.

The amount of water shall also include that liquid added to the batch in the form of admixtures.

The amounts and proportions of fine and coarse aggregates to be used in each mix shall be such as to produce a plastic, workable mix, free from harshness, which can be readily placed into the corners and angles of the forms and around reinforcement and other embedded work without undue accumulation of water laitance on the surface, and such that there will be no honeycombing in the structure.

Proportions of fine and coarse aggregates shall be such that the ratio for the coarse to the fine aggregate shall not be less than one (1) nor more than two (2). On all work under these specifications, a cubic yard of concrete shall contain not less than six (6) sacks (564 lbs.) of cement or cement and fly ash mixture.

501-3.6 BATCHING AND MIXING CONCRETE. Mixing of concrete shall be done in a rotary batch mixer of a type acceptable to the ENGINEER. The volume of the mixed material for each batch shall not exceed the manufacturer's rated capacity of the mixer.

The batch materials shall be delivered to the mixer measured accurately to the required proportions and shall be mixed continuously for not less than one and one-half (1½) minutes after all materials including water are in the mixer during which time the mixer shall rotate at the speed recommended by its manufacturer. The entire batch shall be discharged before recharging the mixer. The mixer shall be cleaned as required to ensure adequate and complete mixing.

In lieu of jobsite mixing, ready mixed concrete meeting the requirements specified herein and all applicable requirements of ASTM C94 may be approved provided the quantity and rate of delivery of materials will be such as to permit unrestricted progress of the work in accordance with the placing schedule. When the air temperatures are above 90°F, the concrete shall be discharged within one (1) hour. When air temperatures are below 90°F, the concrete shall be discharged within a maximum of one and 1½-hours. Mixing shall not be less than 60 revolutions nor more than 300 revolutions of the drum after the introduction of the mixing water to the cement and aggregates.

Truck mixers shall be equipped with a means by which the number of revolutions of the drum, blades, or paddles may be readily verified.

Two (2) copies of complete data concerning mixing and transportation methods shall be submitted to the ENGINEER for approval.

501-3.7 SUBGRADE/BASE COURSE. Subgrades or aggregate base for placing concrete shall be prepared in accordance with Section 200 "Earthwork" or Section 300 “Base Courses” and shall be damp but not wet before the concrete is placed. Hand tamping of subgrades/bases will not be permitted. Approved mechanical type shall be used. A minimum of 6 inches of subgrade/base preparation and compaction testing shall be incidental to other items.

The CONTRACTOR shall engage an independent testing laboratory as required per Section 104 of these Specifications, or otherwise approved by the ENGINEER, to perform subgrade/base compaction tests. Subgrade/base compaction tests in accordance with ASTM D1557 shall be performed and reported at the following frequencies:

a. One (1) for every 12 lots of new sidewalks, driveways, and/or driveway widenings.

b. One (1) for every 20 repairs of sidewalks, driveways, curb and gutters, and valley gutters.

c. One (1) for every 400 square feet (SF) of full-depth pavement repair.

d. Two (2) for each new construction unit where 1,000 linear feet (LF) or less of curb and gutter is constructed.

e. One (1) for each valley gutter placed.

f. One (1) for each 750 square yards (SY) of concrete pavement placed.

Should it become necessary to require an additional number of initial compaction tests, over and above the number specified, the ENGINEER will consider additional testing as extra work.

501-3.8 FORMS. After the subgrade and aggregate base course, if required, have been graded and compacted, the forms shall be set and secured in such a manner as to prevent bulging away from a true line when poured and tamped with concrete, and said forms shall be constructed of wood or steel. If made of wood, they shall not be less than 1½ inches and one side planed smooth. The top edge of each form shall be true and straight and when set and secured shall conform to the grade of the finished pavement. All forms shall be clean and coated with oil or other approved material before the concrete is placed. Forms shall have a depth not less than the depth of the concrete to be constructed.

501-3.9 PLACING CONCRETE. The subgrade/base shall be sprinkled directly ahead of the placing of concrete. The concrete shall be placed on the moist subgrade/base and spread uniformly to the required depth with as little handling as possible and shall be mechanically vibrated to the forms or header boards to prevent voids and honeycombed surfaces. The concrete shall be consolidated so as to produce a uniformly dense concrete and so as to flush sufficient mortar to the surface to permit a proper finish without additional water added to the surface. Excessive water, laitance, or other inert material shall be floated from the surface.

501-3.10 COLD WEATHER. When the temperature remains below 40°F for more than 3 days prior to placement, or when the temperature is forecasted to fall below 40°F during the twenty-four (24) hour period immediately following placement, special provisions shall be taken. Except as otherwise specified, mixing, placing, and protection shall be in accordance with the latest edition of the Portland Cement Association Manual entitled *Design and Control of Concrete Mixtures*. Curing shall be specified in Subsection 501-3.13.

Concrete poured outside of specification shall be immediately removed upon direction of the ENGINEER and replaced with new concrete at no expense to the Owners.

In order to maintain the temperatures specified, the concrete shall be entirely enclosed with tarpaulins, polyethylene plastic sheets, commercial insulating blankets, or bat insulation, and all fuel and suitable heating equipment and the necessary labor and supervision shall be furnished. Unvented heaters shall not be used. Only commercial insulating blankets or bat insulation will be permitted as a covering without addition of heat. Full responsibility for the protection of the work shall be under this section.

During freezing weather, temperature records shall be kept by the CONTRACTOR and furnished to the ENGINEER daily showing the temperature at 4-hour intervals of the outside air, of the air in the coldest part of the enclosure near the concrete, of the concrete as it is placed, and of the concrete in place at such points as the ENGINEER may direct.

501-3.11 HOT WEATHER. Concrete materials shall be placed at the lowest practicable temperature except as specified in Subsection 501-3.10 for cold weather. When hot weather conditions exist that would seriously impair the quality and strength of the concrete, the concrete shall be placed in accordance with the latest edition of the Portland Cement Association Manual entitled *Design and Control of Concrete Mixtures*, except as otherwise specified herein.

During hot weather conditions, the temperature of the concrete immediately before it is placed in the forms shall be between 50°F and 90°F.

Shaved ice may be used in the mixing water to reduce the temperature of the concrete at the mixer, but there shall be no ice in the concrete when it is discharged from the mixer.

Retarder admixtures shall not be used to control the setting time of the concrete.

501-3.12 SURFACE FINISH. Concrete pavement surfaces shall be floated to a true and even plane and steel troweled. The CONTRACTOR shall provide factory-made straightedges, 10 feet in length for use in checking forms and final finish of all pavement sections. The maximum allowable deviation from a true plane shall be 1/8 inch in 10 feet on the top and face of forms and all exposed surfaces of the finished pavement section.

New Pavements. After surface irregularities have been removed, and before the concrete attains an initial set, a seamless strip of stiff-fiber artificial grass carpet shall be dragged longitudinally along the full width of the pavement. The surface texture shall be uniformly roughened leaving corrugations in the surface that are uniform in appearance. The width of material in the drag shall be in contact with the full width of the pavement. The drag shall be operated off of a string line with its leading edge attached to bridge riding on the forms or adjacent slabs. The drag shall be maintained clean and free from encrusted mortar. A drag that cannot be cleaned shall be replaced with new fabric.

Repaired Pavements. After the irregularities have been removed and before the concrete attains an initial set, a broom shall be drawn transversely across the pavement. The brooming shall be sufficient to leave significant marking in the pavement.

501-3.13 PROTECTION AND CURING. All concrete work shall be carefully protected from sun, wind, storms, and travel until thoroughly set, and the CONTRACTOR will be held responsible and must make good at the CONTRACTOR's expense any damage

from any cause until approved and accepted by the ENGINEER. A chemical curing agent shall be used at all times, provided it is applied in accordance with the manufacturer's specifications and conforms to Subsection 501-2.12.

Cure concrete pavement for a period of at least 72 hours. Suspend curing when the pavement has attained the minimum strength as per Subsection 501-3.3.

During the curing period, only equipment necessary for curing and for sawing joints will be allowed on the concrete.

Immediately after placement, protect concrete from premature drying, excessively hot or cold temperatures, and mechanical injury.

Avoid premature drying by either applying an approved curing compound in accordance with manufacturer’s recommendations and approved by the ENGINEER, or by completely covering concrete with an approved moisture barrier to reduce evaporation.

Maintain concrete with minimal moisture loss at relatively constant temperature for periods necessary for hydration of cement and hardening of concrete.

Grade site to maintain positive drainage away from new concrete.

If the ambient temperature falls below 40°F, maintain the concrete surface temperature between 40°F and 90°F for the duration of the curing period.

If high-early strength concrete is used, maintain the surface temperature between 50°F and 90°F.

Conduct heating operations to avoid sudden temperature changes in the concrete. Before removing any enclosures, decrease the concrete’s surface temperature to the air temperature at a rate not to exceed 15°F per hour.

Submit a detailed temperature maintenance plan before placing concrete if the ambient temperature is expected to drop below 40°F within the curing period.

501-3.14 CONTRACTOR’S STAMP OR NAME PLATE. The CONTRACTOR shall mark in each 500 linear feet of new pavement, either by stamping or inlaying, an approved metal plate, with CONTRACTOR's name, address, and year in which the pavement was constructed. The stamped letter shall be 1 inch high and 1/4 inch deep. If a metal plate is used, the top of the plate shall be flush with the top of the pavement. CONTRACTOR's stamp must be approved by the ENGINEER prior to beginning of the construction year. CONTRACTOR shall be responsible for changing the date on the stamp each year.

501-3.14a STATIONING STAMP. The CONTRACTOR shall imprint survey station numbers for new concrete pavement at every station that is divisible evenly by 5 (e.g. 5+00, 10+00, etc.) and imprint tick marks (+) at every 100-foot intervals between the

station markings. Stamped numbers shall be 1 inch high, tick marks shall be 1 inch by 1 inch, all stamps shall be 1/4 inch” deep. Stationing numbers shall only be placed in one direction of travel, approved by the ENGINEER.

501-3.15 CONCRETE DISPOSAL. The disposal area(s) for this item shall be within a 9-mile radius of the project when said area is specified on the plans, in the special provisions, or by the ENGINEER. When a disposal area is not specified, the CONTRACTOR shall be required to either provide such an area which shall be approved by the ENGINEER or haul to the City of Bismarck Solid Waste Facility and pay the required disposal fees.

501-3.16 SAWING CONCRETE. All concrete sawing designated on the plans and/or as directed by the ENGINEER, shall have a minimum depth equal to one third the thickness of the concrete.

Prior to sawing, an inspection of the adjacent slab shall be made to determine if any micro cracks exist. If any micro cracks exist, the saw cut line may be positioned so the cracked area may be removed.

501-3.17 SELECT BACKFILL. The material furnished under this item shall be bedding material in accordance with Subsection 801-2.9 or recycled concrete "readywash" type material and shall be mechanically tamped in place in layers not exceeding 6 inches in depth.

501-3.18 BACKFILL. The newly constructed concrete pavement shall be backfilled within 14 days and compacted in accordance with Section 202.

501-3.19 JOINTS. Joints in concrete pavement shall be of the design specified and shall be constructed at the spacings and locations shown. The CONTRACTOR shall be responsible to establish joint locations as approved by the ENGINEER.

Transverse Contraction Joints. The contraction joints shall consist of weakened planes created by either sawing, inserting preformed inserts, or forming grooves in the pavement surface on small areas. The location of the grooves to be formed or sawed shall be clearly and accurately marked on the plastic concrete surface by the CONTRACTOR. When specified, the contraction joints shall include a load transfer device.

Sawed contraction joints shall be cut to the required dimensions with proper equipment. Concrete saws shall be adequately powered and furnished with suitable blades to effectively cut pavement joints to required dimensions. Each blade of multiple-blade saws shall be maintained in accurate alignment to the other blades. A device shall be provided to guide the saw along the required joint alignment. Manual guidance of the saw will be permitted if specified results are obtained. A sufficient amount of sawing equipment shall be available to maintain required progress and provide prompt replacement in case of breakdown. Adequate artificial lighting shall be provided for night sawing.

The time and sequence of sawing shall be adjusted so all joints are cut before uncontrolled cracking occurs and to permit sawing without excessive raveling. Joints shall be sawed within 24 hours to prevent uncontrolled cracking. Uncontrolled cracking that occurs shall be routed, cleaned, and sealed according to Subsection 501-3.23, at the CONTRACTOR's expense. Immediately after sawing, the joint shall be flushed with water under sufficient pressure to remove residue left by the sawing operation. If an uncontrolled crack occurs within 3 feet of a proposed joint location before or during sawing, the joint shall be omitted and sawing of the joint discontinued. Any joint sawed within 3 feet of an uncontrolled crack shall be repaired at the CONTRACTOR's expense. When sawing is performed before removing side forms, the initial saw cut shall extend to within 1/2 inch or less of the side forms. If the forms have been removed, the saw cut will be extended to the edges of the slab. Any curing media removed during sawing shall be immediately replaced.

Formed Contraction Joints. A formed contraction joint shall be constructed by installing an approved, preformed insert into the plastic concrete before final surface finishing. The inserts shall be vibrated into place or installed in a groove formed by a vibrating cutting bar. The inserts' top edges shall be flush with the concrete surface. Any voids, depressions, or ridges of concrete caused by installing inserts shall be filled or removed by hand-finishing methods, and the surface across the joint shall be straightedged according to Subsection 501-3.12. The groove formed by the inserts shall be perpendicular to the pavement surface, true to the required alignment, and continuous along the full length of the joint. Inserts, except those designed to remain, shall be removed without damage to adjacent concrete.

When specified for use with transverse contraction joints, the dowel bars shall be held in the specified position parallel to the slab surface and to the centerline within a tolerance of 1/8 inch per foot vertically and horizontally. The dowel bar assembly shall be an approved metal supporting device securely staked to the roadbed and shall hold the dowel bars at the correct spacing, alignment, and elevation. The position of these load transfer devices shall be accurately marked with steel pins, or other precise methods, to locate the transverse joint over the center of the dowels.

Dowel bars shall have a uniform coat of Tectyl 506 applied by the manufacturer, or a thin, uniform coat of multipurpose lithium grease, NLGI Grade 2, shall be used as the release agent. Multipurpose lithium grease shall be applied to the entire length of the dowel bars within 2 hours of being covered with concrete.

Transverse Construction Joints. A transverse construction joint shall be installed at the end of each day's pour and whenever the elapsed time between placement of successive batches or loads of concrete exceeds 45 minutes.

The transverse construction joint shall be formed by installing an approved dowel splicer bar basket assembly. The assembly shall hold the dowel splicer bars parallel to the centerline and slab surface. The dowel splicer bars shall be placed with a tolerance of 1/8 inch per foot vertically and horizontally. The assembly shall be staked perpendicular

to the centerline and marked. The CONTRACTOR shall pave over the assembly far enough to maintain the elevation of the top of the slab. A full-depth saw cut shall be made to expose the dowel splicer bar, the excess concrete shall be disposed of, and the threaded dowel extension bar shall be installed.

After the adjacent slab is placed, the construction joint shall be sawed and sealed as specified.

Other Concrete Joints. Other concrete joints shall be formed by an approved header shaped to conform to the cross section of the slab being placed. The header shall be rigid and secure to prevent bulging or displacement while adjacent concrete is being placed and finished. The face of the header in contact with the concrete shall be perpendicular to the pavement surface and shall be at right angles to the pavement centering. A two-piece or other approved header shall be designed to accommodate proper placement of any dowel bars or reinforcement extending across the joint and to allow removal without damage to the concrete.

The concrete adjacent to the header shall be thoroughly consolidated by an internal vibrator or other approved methods. Segregated or improperly consolidated concrete shall be removed after the pavement has been finished, and the surface adjacent to the header shall be edged to the specified radius.

Longitudinal Weakened Plane Joints. Planes of weakness for longitudinal joints shall be created by sawing grooves in the pavement surface. Grooves shall be sawed to meet dimensions shown and shall be true to the required alignment of the joint.

Longitudinal Construction Joints. The longitudinal joint between adjoining, separately constructed lanes of pavement shall be constructed as shown on the plans. Tie bars across longitudinal construction joints shall be at the locations, spacing, and depth shown. Tie bars may be bent at right angles against the form to the first lane constructed and straightened into final position before the concrete of the adjacent lane is placed. The tie bars may be inserted through small, accurately positioned holes in the side forms. Two-piece connectors may also be used, if approved by the ENGINEER.

All dowel bars, drilled in dowels, dowel bar baskets, tie bars, headers, dowel bar basket assemblies, and sawing of longitudinal and transverse joints shall be considered incidental to concrete pavements placed or repaired and accepted by the ENGINEER.

501-3.20 EXPANSION JOINTS. Expansion joints, which are specified to be sealed, shall be constructed with the top of the expansion joint material 1/2 inch to 3/4 inch lower than the adjacent concrete or form.

501-3.21 SEALING OF JOINTS. All joints specified herein or in the standard details shall be sealed within 14 days of the construction and prior to opening to public traffic.

Just before sealing, each joint shall be thoroughly cleaned of all foreign material, including membrane-curing compound. Joint faces shall be dry when sealant is applied. Material for sealant applied hot shall be stirred during heating to prevent localized overheating.

Joints shall be sealed within 1/4 inch of the surface. The joint filling shall be done without spilling material on the exposed surface of the concrete. Any excess material on the surface of the concrete shall be removed immediately and the concrete surface cleaned. The use of sand or similar material to cover the seal shall not be permitted. Joint sealing material shall not be placed when the air temperature in the shade is less than 32°F, unless approved by the ENGINEER.

501-3.22 DRILLED IN DOWEL AND TIE BARS. Dowels shall be drilled into widened, existing, or repaired concrete pavements. Transverse dowels shall be 1¼ inches by 18 inches long smooth epoxy coated or #9 by 18 inches deformed (reinforcing bar) epoxy coated.

Holes drilled for dowels shall be located at mid-depth of the slab and spaced at 12 inches on center in accordance with the standard details or as directed by the ENGINEER. Holes drilled for dowels shall use a rigid frame mounted drill rig. The holes shall be a maximum diameter of 1 3/8 inches. Transverse doweled holes shall be air blown clean to the back of the hole. For smooth dowels, inject high-viscosity epoxy (meeting AASHTO M 235 Type 4, Grade III) into the back of the hole with a pressurized caulking apparatus. Insert 1¼ inches by 18 inches smooth dowel to allow air to escape and ensure completely filled holes with bars permanently fastened to the existing concrete. Apply a small form to face of hole to keep epoxy from flowing out and remove it prior to placing concrete. Align smooth dowel bars with the pavement direction parallel to the plane of the surface. Lightly coat the end of the smooth dowels extending into the concrete with grease.

Longitudinal tie bars shall be #6 by 18 inches deformed bars (grade 40) and shall be installed at 3 feet on center. Drills shall be mounted on a rigid frame to provide proper position and alignment. The holes shall be a maximum diameter of 7/8 inch. Tie bars shall be located at mid-depth of the slab and spaced as indicated on the details, or as directed by the ENGINEER. The cost for drilled in tie bars shall be considered incidental.

501-3.23 RANDOM CRACK SEALING. Random cracks narrower than 1/2 inch in portland cement pavement and curb and gutter that are not settled or displaced shall be sealed as directed by the ENGINEER. Before sealing, each crack shall be thoroughly cleaned mechanically of all dust, dirt, concrete scale, or other foreign matter and blown out with a jet of compressed air. The crack shall be clean and dry when sealed. Random cracks shall not be sealed when the air temperature is below 40°F.

Random cracks wider than 1/2 inch shall be widened and sealed with silicon sealant according to Subsection 501-2.9. All other random cracks shall be sealed with hot pour in accordance with Subsection 501-2.9.

Random cracks shall be sealed within 1/4 inch of the surface.

501-3.24 SAW AND SEAL. Repaired working joints and random cracks on portland cement pavements and curb and gutters shall be sawed and sealed as follows:

Saw and seal any single, transverse, uncontrolled crack that penetrates the full slab length.

All uncontrolled cracking and repaired working joints shall be sawed and sealed to the following dimensions:

Sawed Joint Width, Inches	Sealant Bead Thickness, Inches	Backer Rod Diameter, inches	Minimum Sawed Joint Depth, Inches	Backer rod Placement Depth, Inches
1/2	1/4	5/8	1 1/4	1/2
5/8	5/16	3/4	1 1/2	9/16
3/4	3/8	1	1 3/4	7/8
7/8	7/16	1	1 3/4	1 1/16
1	1/2	1 1/4	2	3/4

Joints shall be sawed to the nearest 1/8 inch in width and to the nearest 1/4 inch in depth.

The joint shall be cleaned of any materials such as rocks, dirt, oil, asphalt, paint, and rust, and blown out with compressed air immediately prior to installing sealant. Backer rod, if utilized, shall be 25 percent larger than joint width and installed full width of joint repair. Sealant shall be installed from inside the joint with an approved mechanical device. Sealant shall be filled to 1/4 inch below pavement surface. Sealant shall conform to Subsection 501-2.9. Joints to be sealed by this method will be marked by the ENGINEER.

Compression joint material within 1/2 inch from surface of pavement shall be removed and sealed, which will be paid at the unit price bid for joint and crack sealing.

501-3.25 FULL-DEPTH SLAB REPAIR. This work shall consist of removal and replacement of full-depth concrete pavement as follows:

Except where joints form the edge of the repair, the edges of the repair area shall be sawn full depth with a diamond or carborundum blade. If the full-depth cuts are made in more than one pass, the final depth cut shall be made immediately following the partial-depth cuts. Transverse cuts shall be made perpendicular to centerline, and longitudinal saw cuts shall be made parallel to centerline. Saw cuts which extend into concrete which will remain shall be only long enough to guarantee a full-depth cut of the repair area and shall be sealed according to Subsection 501-3.23. Concrete shall be removed within 24 hours of the sawing. When the repair area is repaired, the edges shall be

reasonably free of frays or spalls at the pavement surface. The cost of removing, hauling, and disposing of existing concrete and sealing saw cut overruns shall be included in the unit price bid for “Full-Depth Repair.”

Existing concrete shall be removed with minimum disturbance of existing subgrade/base. All voids which existed below the repair area shall be filled and compacted with material meeting requirements of Section 302 of City of Bismarck Standard Specifications as directed by the ENGINEER. The cost of hauling, placing, and compacting the material shall be incidental to the full-depth repair items. Any over-depth removal unauthorized by the ENGINEER shall be replaced and compacted as above at the CONTRACTOR's expense.

At joints designated by the ENGINEER, dowel bars shall be drilled transversely and longitudinally at full-depth repair areas into existing concrete faces and sealed in accordance with Section 501.

Specifications for concrete mix and placement shall conform to Section 501, with the following exception:

Concrete for full-depth repair shall be high early strength concrete. Type II or IIA may be substituted with Type III or IIIA meeting the requirements of ASTM C150, to achieve high early strength concrete. Water reducing and set acceleration may be achieved through the use of a commercial admixture which meets AASHTO M194 Type A, C, or E. A design of this concrete mix shall be submitted in accordance with Subsection 501-3.3. Existing joints, whether longitudinal or transverse through an area removed for full-depth repair, shall be sawed within 72 hours of concrete placement and sealed in accordance with Subsection 501-3.23 "Joint and Crack Sealing." Mechanical jointing will not be allowed in these repair areas.

501-3.26 CASTING ADJUSTMENTS. Construction materials, methods, and measurements and payments shall conform to Section 1206**.**

501-3.27 WRAPPED UTILITY BOXES. Construction materials, methods, and measurements and payments shall conform to Section 1206.

501-4 MEASUREMENT AND PAYMENT

501-4.1 PORTLAND CEMENT CONCRETE PAVEMENT. Portland Cement Concrete Pavement shall be measured by the square yard (SY) as indicated and paid for at the unit price bid for “PCC Pavement” complete, in place, and accepted by the ENGINEER. Pavement thickness shall be as designated in the bid item.

501-4.2 RANDOM CRACK SEALING. Random Crack Sealing shall be measured by the linear foot (LF) and paid for at the unit price bid for "Random Crack Sealing" complete, in place, and accepted by the ENGINEER.

501-4.3 SAW AND SEAL JOINTS. Saw and Seal Joints shall be measured by the linear foot (LF) and paid for at unit the price bid for "Saw and Seal Joints" complete, in place, and accepted by the ENGINEER.

501-4.4 FULL-DEPTH REPAIR. Full-Depth Repair shall be measured by the square foot (SF) and paid for at the unit price bid for "Full Depth Repair" for area sawed, removed, replaced, and sealed complete, in place, and accepted by the ENGINEER.

501-4.5 SAWING CONCRETE. Sawing Concrete shall be measured by the linear foot (LF) and paid for at the unit price bid for “Sawing Concrete” completed to the required depth and approved by the ENGINEER.

501-4.10 SELECT BACKFILL. Select Backfill when listed on the Proposal form shall be measured by the ton (TON) and paid for at the unit price bid for “Select Backfill” complete, in place, and accepted by the ENGINEER.

501-4.11 ADDITIONAL PORTLAND CEMENT. During the course of construction, the ENGINEER may need to require the use of additional portland cement in the concrete mix. When requested and used, all cement greater than 6 sacks (564 lbs.) per cubic yard of concrete except for full-depth repairs shall be measured by the sack (94/lbs.) and paid for at the unit price bid for “Additional Portland Cement” complete, in place, and accepted by the ENGINEER.

SECTION 502 – SLABJACKING

502-1 DESCRIPTION

This work shall consist of slabjacking concrete in accordance with these specifications and in conformity with dimensions and typical cross sections shown on the plans and with lines and grades established by the ENGINEER.

502-2 SLABJACKING MATERIALS

Slabjacking materials shall consist of portland cement, sand-free loam topsoil, powder limestone, or lime sludge, which shall become fluidlike when mixed with water.

A preferred mixture is lime sludge or powder limestone. Powder limestone shall contain a minimum of 90 percent calcium and magnesium carbonates, grated so that 100 percent pass a 60-mesh screen, 85 percent pass a 100-mesh screen, and 60 percent pass a 200-mesh screen. Portland cement shall contain about a 5:1 ratio of limestone to cement. Topsoil shall be a good loam soil relatively free of sand, clay, pebbles, and roots.

Material shall be the consistency of a thick cream that tends to flow freely and fill all voids and openings, yet should have a sufficient internal resistance (stiffness) that the amount of lift may be controlled.

Cement content may vary with each individual application; some jobs may only contain 5 percent cement, others as much as 15 percent. A high cement content mix may be used when it is desirable to have the mix set up quickly.

Urethane foam resin such as Hydraulic Mudpumps, Inc. RR201 under 4-inch thick slabs and RR401 under greater than 4-inch slabs and curb and gutter and NCFI polyurethanes 24-486 are also allowed.

502-3 SLABJACKING.

This work shall consist of raising, leveling, void filling, and stabilizing concrete slabs by drilling through the concrete slab and forcing a fluidlike material on the bottom of the slab.

Slabjacking shall not be done during the following weather conditions:

1. Excessive rain or when temperature is below 32°F.
2. When frost is in the ground.
3. During hot weather where the mixture could stand for any length in time causing setup to occur.

Slabjacking holes shall be drilled into slabs 3/4 inch to 1½ inches in diameter. Equipment used to drill holes shall not strike too heavy a blow and shall avoid breaking off the lower side of the slab as the drill goes through. Any damage to existing adjacent slabs or to the slab to be repaired shall be the responsibility of the CONTRACTOR. Spacing and location of holes shall be drilled according to the particular job and the way the slab must be lifted, tilted, and voids filled.

Slabjacking holes shall be finished by removing excess slabjacking materials and finishing off each hole with a dry cement mix leaving a slight crown in the middle to allow shrinkage of cement and shall be completed within 7 days after completion of lifting. Any finished surface which has settled below the slab grade shall be removed and refinished. All joints adjacent or within the slabjacked area wider than 3/8 inch shall be sealed in accordance with Subsection 501-2.9.

The work area shall be kept clean and safe at all times.

When a finished slab does not meet the following tolerances, it will be considered a failure and therefore not accepted by the ENGINEER, and no payment will be made:

Curb and Gutter Joints: Sags no more than 1/4 inch per 10 linear feet (LF) or 1/4 inch vertical separation at a joint.

Four-Inch, Six-Inch, and Eight-Inch Concrete: 1/2 inch vertical separation per joint.

Valley Gutters and Driveways: Will be at the discretion of the ENGINEER.

502-4 MEASUREMENT AND PAYMENT

502-4.1 SLABJACKING 4-INCH CONCRETE. Slabjacking 4-Inch Concrete shall be measured by the square foot (SF) and paid for at the unit price bid for "Slabjacking 4-Inch Concrete" complete, in place, and accepted by the ENGINEER.

502-4.2 SLABJACKING 6-INCH CONCRETE. Slabjacking 6-Inch Concrete shall be measured by the square foot (SF) and paid for at the unit price bid for "Slabjacking 6-Inch Concrete" complete, in place, and accepted by the ENGINEER.

502-4.3 SLABJACKING 8-INCH CONCRETE. Slabjacking 8-Inch Concrete shall be measured by the square foot (SF) and paid for at the unit price bid for "Slabjacking 8-Inch Concrete" complete, in place, and accepted by the ENGINEER.

502-4.4 SLABJACKING STANDARD CURB AND GUTTER. Slabjacking Standard Curb and Gutter shall be measured by the linear foot (LF) and paid for at the unit price bid for “Slabjacking Standard Curb and Gutter” complete, in place, and accepted the ENGINEER.

502-4.5 SLABJACKING CURB AND GUTTER (8-INCH GUTTER). Slabjacking Curb and Gutter (8-Inch Gutter) shall be measured by the linear foot (LF) and paid for at the unit price bid for “Slabjacking Curb and Gutter (8-inch Gutter)” complete, in place, and accepted by the ENGINEER.

502-4.6 SLABJACKING MOUNTABLE CURB AND GUTTER. Slabjacking Mountable Curb and Gutter shall be measured by the linear foot (LF) and paid for at the unit price bid for “Slabjacking Mountable Curb and Gutter” complete, in place, and accepted by the ENGINEER.

SECTION 503 – CONTROLLED DENSITY FILL (CDF)

503-1 DESCRIPTION

This work shall consist of placement of a controlled density fill which is a mixture of coal fly ash, water, sand, and portland cement that flows like a liquid, sets up like a solid, is self-leveling, and requires no compaction or vibration to achieve maximum density.

503-2 MATERIALS

503-2.1 PORTLAND CEMENT. Portland cement shall conform to the requirements of ASTM C150, Type I or Type II. If for any reason cement becomes partially set or contains lumps of caked cement, it shall be rejected. Cement salvaged from discarded or used bags shall not be used.

503-2.2 FLY ASH. Fly Ash shall conform to Subsection 501-2.2a.

503-2.3 FINE AGGREGATE (SAND). Fine aggregate shall conform to the requirements of ASTM C33 except for aggregate gradation. Any aggregate gradation which produces performance characteristics of the ASTM specified herein will be accepted, except as follows:

Sieve Size	Percent Passing By Weight
¾”	100
No. 200 (0.075 mm)	0-12

503-2.4 WATER. Water used in mixing shall be free of oil, salt, acid, alkali, sugar, vegetable matter, or other substances injurious to the finished product.

Dyes and other methods of coloring the backfill material may be incorporated if desired.

503-3 CONSTRUCTION REQUIREMENTS

503-3.1 PROPORTIONS. The CONTRACTOR shall submit to the ENGINEER a mix design including the proportions and source of material, admixtures, and dry cubic yard batch weights. The mix shall contain up to 100 pounds of cement and 300 pounds of fly ash per cubic yard, with the remainder of the volume composed of sand, water, and any approved admixtures.

a. COMPRESSIVE STRENGTHS

CDF shall be designed to achieve a 28-day compressive strength of 80 to 130 psi when tested in accordance with ASTM C39. There should be no significant strength gain after 28 days. Test specimens shall be made in accordance with ASTM C31, except that the samples will not be rodded or vibrated and shall be air cured in their molds for the

duration of the cure period. The air content, tested in accordance with ASTM C231, shall fall within the range of 10 percent to 12 percent.

b. CONSISTENCY

Consistency of the fresh mixture shall be such that the mixture may be placed without segregation. A desired consistency may be approximated by filling an open ended 3-inch diameter cylinder, 6 inches high to the top, with the mixture and the cylinder immediately pulled straight up. The correct consistency of the mixture will produce an approximate 8-inch diameter circular-type spread without segregation. Adjustments of the proportions of materials should be made to achieve proper solid suspension and flowable characteristics; however, the theoretical yield shall be maintained at 1 cubic yard for the given batch weights.

503-3.2. PLACEMENT

a. PLACEMENT. CDF may be placed by any reasonable means from a mixing unit into the space to be filled. Agitation is required during transportation and waiting time. Placement shall be performed in such a manner that structures or pipes are not displaced from their desired final position and intrusion of CDF into undesirable areas is avoided. The material shall be brought up uniformly to the fill line shown on the plans or as approved by the ENGINEER. Each placement of CDF shall be as continuous as possible. If CDF is placed in more than one layer, the base layer shall be free of surface water and loose or foreign material prior to placement of the next layer.

b. LIMITATIONS OF PLACEMENT. CDF shall not be placed on frozen ground. Mixing and placing may begin when the air temperature is at least 35° F and rising. At the time of placement, CDF shall have a temperature of at least 40°F. Mixing and placement shall stop when the air temperature is 40° F and falling or when the anticipated air temperature will be 35°F or less in the 24-hour period following proposed placement.

503-3.3 CURING AND PROTECTION

a. CURING. The air content of the CDF should be maintained at temperatures above freezing for a minimum of 72 hours. If the CDF is subject to temperatures below 32° F, the material may be rejected by the ENGINEER if damage to the material is observed.

b. PROTECTION. The CDF shall not be subject to loads and shall remain undisturbed by construction activities for a period of 48 hours or until a compressive strength of 15 psi is obtained. The CONTRACTOR shall be responsible for providing evidence to the ENGINEER that the material has reached the desired strength. Acceptable evidence shall be based upon the independent testing laboratory compressive test results.

503-4 MEASUREMENT AND PAYMENT

503-4.1 CONTROLLED DENSITY FILL. When not incidental to other items, Controlled Density Fill shall be measured by the cubic yard (CY) or other method indicated on the proposal and paid for at the unit price bid for “Controlled Density Fill” complete, in place, and accepted by the ENGINEER.

SECTION 600

CONCRETE SIDEWALKS, DRIVEWAYS, AND CURB AND GUTTER

SECTION 601 – CONCRETE SIDEWALKS

601-1 DESCRIPTION

This work shall consist of the construction of air-entrained portland cement concrete sidewalks in accordance with these specifications and standard details at the locations and to the lines and grades shown on the plans or as directed by the ENGINEER. This work shall also include the removal of sidewalk or block walk, when listed on the proposal, as shown on the plans, or as directed by the ENGINEER.

The construction of concrete sidewalks in or along any street shall be executed in strict conformity with the provisions of the City Ordinances.

601-2 MATERIALS

601-2.1 GENERAL. Materials shall meet the requirements of Subsection 501-2 with the following additional provisions.

601-2.2 PORTLAND CEMENT. Type 1 or Type 1A will be allowed.

601- 2.3 FLY ASH. Fly ash shall conform to the requirements listed in Subsection 501-2.2a.

601-2.4 DETECTABLE WARNING PANELS. The following detectable warning panel cast-in-place systems have been pre-approved:

Advantage Tactile Systems - Advantage Cast Iron Premier ADA Tactile Detectable Warning Tile

TufTile - Cast Iron ADA Detectable Warning Tile

ADA Arcis Tactile

Detectable Warning Paver by Hanover Architectural Products

Cast Iron Coated by East Jordan Iron Works

ADA Replaceable (Wet-Set) Stainless Steel Tactile Unit by ADA Solutions, Inc
Stainless Steel Detectable Warning Tile by Advantage Tactile Systems, Inc.

MetalPanel by Metadome, LLC

Access Tile by Access Products, Inc.

Neenah Foundry Detectable Warning Plates

Detectable warning panels shall consist of a surface of truncated domes aligned in a square grid pattern in the predominant direction of travel.

Dome Size: Truncated domes in a detectable warning surface shall have a base diameter of 0.9 inches minimum to 1.4 inches maximum, a top diameter of 50 percent of the base diameter minimum to 65 percent of the base diameter maximum, and a height of 0.2 inches.

Dome Spacing: Truncated domes in a detectable warning surface shall have a center-to-center spacing of 1.6 inches minimum and 2.4 inches maximum and a base-to-base spacing of 0.65 inches minimum measured between the most adjacent domes on the square grid.

Detectable warning panels shall be safety yellow, U.S.-ANSI Z535.1-1991,6.3, unless otherwise directed by the ENGINEER.

601-2.5 STEEL REINFORCEMENT. All steel used for reinforcement in sidewalks shall be Grade 40 or higher and conform to Subsection 501-2.

601-3 CONSTRUCTION REQUIREMENTS

Construction requirements shall conform to Subsection 501-3 with the following additional provisions:

601-3.1 4" CONCRETE REMOVAL. All 4-inch concrete removed shall be disposed of in accordance with Subsection 501-3. All 4-inch concrete removal shall be to the nearest joint, unless directed by the ENGINEER

601-3.2 JOINTS. Expansion joints shall be placed in 4-inch concrete at intervals as shown on the standard details or as directed by the ENGINEER. Expansion joints shall be used when adjoining private concrete slabs unless otherwise approved by the ENGINEER. The expansion joint material shall have a thickness of 1/2 inch to 3/4 inch.

The 4-inch concrete shall be divided into sections by contraction joints formed by a jointing tool or sawing.

601-3.3 FORMS. Forms shall conform to Subsection 501-3. Forms for use on curves shall be capable of installation to within 1/2 inch of the true curve; if the radius is less than 400 feet, the forms shall be either flexible material or shaped to fit the curve.

601-3.4 CONTRACTOR'S STAMP OR NAME PLATE. The CONTRACTOR shall mark at the ends of the sidewalk, either by stamping or by inlaying an approved metal plate, which shall conform to Subsection 501-3.

601-3.5 BACKFILL. The 4-inch concrete shall be backfilled within 14 days of placement to a level width of at least 2 feet along all edges and to a height equal to the top finished grade of the sidewalk. The backfill shall be compacted in accordance with Section 202 "Excavation and Embankment."

601-3.6 FOUR-INCH EXPANSION JOINT WITH REINFORCING STEEL. Four-inch expansion joints shall be doweled in accordance with standard details. Reinforcing steel shall be 1/2 inch by 12 inches long, smooth or #4 by 12 inches deformed (reinforcing bar). Reinforcing Steel shall be centered on the 4-inch slab parallel to the surface of the slab at 12-inch centers. Paper tubes or a bond breaker material shall be used as approved by the ENGINEER. “Four-Inch Expansion Joint with Reinforcing Steel” shall be incidental to other bid items.

601-3.7 CONCRETE QUALITY CONTROL AND SUBGRADE TESTING. Testing frequencies shall conform to Subsection 501-3. Payment shall be considered incidental to other bid items.

601-3.8 ADA CURB RAMPS. ADA curb ramps must be installed when installation of new sidewalks, new asphaltic or concrete pavements, and repair of existing sidewalks, curbs, valley gutters, and utility cuts are made at an intersection. For any repair done to an existing ADA curb ramp that does not have the detectable warning panels for each direction of the ramp, the CONTRACTOR shall remove the additional concrete to install a detectable warning panel.

The ADA curb ramps shall be tied to adjacent concrete pavements and curb with 1-foot #4 reinforcing steel spaced at 1-foot centers.

The curb ramp landing lengths, directions, and placements of the detectable warning panels shall be determined by the ENGINEER in the field.

Curb ramps installed prior to installation of adjacent sidewalk shall be placed such that the top of the ramp matches the low side of the future sidewalk. The top of ramp elevation shall comply with ADA standards and the City of Bismarck Standards for placement and elevations of sidewalks as per Standard Drawing 600-18.

The ADA curb ramps for new asphaltic pavements or concrete pavements shall be protected by steel fence posts until construction of adjacent sidewalks is completed. The number of fence posts and the location shall be in accordance with Standard Details or shall be determined by the ENGINEER. Cost of furnishing and installing steel fence posts shall be considered incidental to the price bid for “Detectable Warning Panel and Detectable Warning Panel CI.”

Detectable warning surface shall extend 24 inches in the direction of pedestrian traffic and the full width of the curb ramp landing.

The detectable warning surface shall be located so that the nearest edge is 6 inches minimum and 8 inches maximum from the face of the curb, or determined by the ENGINEER in the field.

The detectable warning panels shall be installed according to the manufacturer's recommendation and in accordance with Standard Details 600-3 and 600-4.

When installing ADA ramps with 2 directional ramps, the distance between the ramps must be no less than 3 feet. If 3 feet cannot be maintained between the ramps, a full drop radius ramp shall be installed.

601-3.9 SIDEWALK TRENCH DRAIN. Sidewalk trench drains shall be installed to the dimensions shown on the plans and in accordance with Standard Detail 600-5. All costs of labor, materials, and equipment to install sidewalk trench drains shall be included in the price for "Sidewalk Trench Drain."

601-3.10 RELOCATION OF LAWN IRRIGATION SYSTEM. Any concrete work requiring the relocation of any part of a lawn irrigation system shall be paid for as extra work as outlined in Subsection 104.

601-4 MEASUREMENT AND PAYMENT

601-4.1 4" CONCRETE. Concrete shall be measured by the square foot (SF) and paid for at the unit price bid for "Four-Inch Concrete" complete, in place, and accepted by the ENGINEER.

601-4.3 4" CONCRETE REMOVAL. Four-inch concrete removed and disposed of shall be measured by the square foot (SF) and paid for at the unit price bid for "Four-Inch Concrete Removal." All concrete removed which is less than 6 inches in thickness shall be paid for under this item.

601-4.4 DETECTABLE WARNING PANEL (CI). Measurement and payment shall be by the square foot (SF) for "Detectable Warning Panel(CI)" complete, in place, and accepted by the ENGINEER.

601-4.5 DETECTABLE WARNING PANEL. Measurement and payment shall be by the square foot (SF) for "Detectable Warning Panel" complete, in place, and accepted by the ENGINEER.

601-4.6 THRU 4.9 SIDEWALK TRENCH DRAIN – (X)" INCHES WIDE. Measurement and payment shall be by the linear foot (LF) for "Sidewalk Trench Drain - Width" complete, in place, and accepted by the ENGINEER.
.

SECTION 602 – CONCRETE DRIVEWAYS

602-1 DESCRIPTION

This work shall consist of new installation, removal, replacement and/or widening of existing driveways. Construction shall utilize air-entrained portland cement 6-inch for residential construction or 8-inch for commercial construction in accordance with these specifications, standards and standard detail~~s~~ drawings at the locations and to the lines and grades shown on the plans or as directed by the ENGINEER.

The construction of concrete driveways on the public right-of-way shall be executed in strict conformity with the provisions of City Ordinances and the following standards:

a. Driveway widenings shall not be approved unless work within the property has been completed with gravel, concrete, or an asphaltic material. Work within the property shall extend a minimum distance of 25 feet from the inside sidewalk edge into the property in order for a vehicle to park, or a fence gate showing access to the property.

b. When widening a radius-type driveway, the widening shall be installed as a radius type driveway, flares mixed with radii shall not be allowed.

c. All driveway widenings shall be set at a 90 degree angle to the street or curb and gutter alignment, unless otherwise approved by the ENGINEER.

d. Driveway widening shall be placed on the owner's property and shall not extend into another property owner's property.

e. New construction driveways and widened driveways shall not be built within six feet of a fire hydrant or within three feet of a street light pole

f. New construction and widened driveways shall not be built within 10 feet of any tree in the right-of-way without permission from the City Forester.

602-2 MATERIALS

Materials for portland cement concrete shall meet the requirements of Sections 501-2 and 601-2.

602-3 CONSTRUCTION REQUIREMENTS

Construction requirements shall conform to Subsection 501-3 with the following additional provisions:

602-3.1 CONTRACTOR'S STAMP OR NAME PLATE. The CONTRACTOR shall mark in each driveway, either by stamping or by inlaying, an approved metal plate

conforming to Subsection 501-3.

602-3.2 BACKFILL. The 6-inch or 8-inch concrete shall be backfilled within 14 days of placement to a level width of at least 2 feet along all edges and to a height equal to the top finished grade of the driveway. The backfill shall be compacted in accordance with Section 202 "Excavation and Embankment."

602-3.3 CONCRETE REMOVAL. Six-Inch Concrete Removal shall consist of removal of concrete that is 5 inches or greater in thickness and less than 8 inches. Eight-Inch Concrete Removal shall consist of removal of concrete 8-inch or thicker. Disposal shall be in accordance with Subsection 501-3.

602-3.4 SEALING JOINT. Joints sealed shall be sealed in accordance with Subsections 501-3 and 501-2 and shall be incidental to other bid items.

602-3.5 TREE REMOVAL OR TREE ROOT CUTTING. Construction methods and measure and payment shall meet the requirements of Section 201.

602-3.6 FORMS. Forms shall conform to Subsection 501-3. All driveway forms for 6-inch or 8-inch concrete shall be set at a 90-degree angle to the street or curb and gutter alignment, unless otherwise approved by the ENGINEER.

602-3.7 JOINTS. Expansion joint materials shall not be used in 6-inch or 8-inch concrete aprons unless approved by the ENGINEER. Jointing shall conform to Detail Drawings 600-7 and 600-8 or joints approved by the ENGINEER. Jointing shall be done with appropriate jointing tools or sawed. All joints sawed into driveways must be sawed with a double blade in order for joint sealant to be installed to proper width and depth.

Joints for driveways adjacent to existing concrete streets shall follow the joint pattern of the existing concrete pavement. Other joints, such as in flare cuts, shall be allowed without following the joint pattern of the existing concrete pavement.

602-3.8 REINFORCING STEEL. Reinforcing steel shall be used for 6-inch or 8-inch driveways where the new concrete meets the sidewalk section, keyways shall not be allowed. Reinforcing steel shall be 1/2 by 12 inches long smooth or #4 by 12 inches deformed (reinforcing bar). Reinforcing steel shall be drilled in at two (2) feet on center. When using 1/2-inch drill bit, paper tubes, or a bond breaker material shall be used as approved by the ENGINEER.

For driveway widening, reinforcing steel shall be drilled at one (1) foot on center for the entire length of the existing driveway. When using 1/2-inch drill bit, paper tubes, or a bond breaker material shall be used as approved by the ENGINEER.

When curbing for the driveway exits, the CONTRACTOR shall drill into the existing curb at two feet on center. When using 1/2-inch drill bit, paper tubes, or a bond breaker material shall be used as approved by the ENGINEER.

602-3.9 CONCRETE QUALITY CONTROL AND SUBGRADE TESTING. Testing shall conform to Section 501-3. Payment shall be considered incidental to other bid items

602-4 MEASUREMENT AND PAYMENT

602-4.1 6” CONCRETE. Six-Inch Concrete shall be measured by the square foot (SF) and paid for at the unit price bid for "6” Concrete" complete, in place, and accepted by the ENGINEER.

602-4.2 8” CONCRETE. Eight-Inch Concrete shall be measured by the square foot (SF) and paid for at the unit price bid for "8” Concrete " complete, in place, and accepted by the ENGINEER.

602-4.2A 8” CONCRETE REMOVAL. Eight-inch or thicker concrete removed and disposed of shall be measured by the square foot (SF) and paid for at the unit price bid for "Eight-Inch Concrete Removal." All 8-inch or thicker concrete removed shall be disposed of in accordance with Subsection 501-3.16.

602-4.3 6” CONCRETE REMOVAL. Six-inch concrete removed and disposed of shall be measured by the square foot (SF) and paid for at the unit price bid for "Six-Inch Concrete Removal." All 6-inch concrete removed which is less than 8 inches in thickness will be paid for under this item.

SECTION 603 – CONCRETE CURB AND COMBINED CURB AND GUTTER

603-1 DESCRIPTION

This work shall consist of the construction of air-entrained portland cement concrete standard curb, combined curb and gutter with 6-inch or 8-inch gutters sections, and mountable curb and gutter in accordance with these specifications and standard details at the locations and to the lines and grades shown on the plans or as directed by the ENGINEER.

This work shall also include the removal of old curbing and curb and gutter when listed on the proposal, as shown on the plans, or as directed by the ENGINEER.

603-2 MATERIALS

603-2.1 Materials shall meet the requirements of Subsection 501-2.

603-3 CLASSIFICATION

603-3.1 STANDARD CURB. The curb constructed under this designation shall be one course, unreinforced or reinforced concrete construction as shown on the standard details. All curbing constructed on a straight line or on a curve shall be considered standard curb.

603-3.2 STANDARD CURB AND GUTTER. The work to be completed under this item shall be one-course, reinforced or unreinforced concrete construction as shown on the standard details as a combined curb and gutter section. When constructed in conjunction with an asphalt street, 6-inch gutter sections shall be used in residential areas and 8-inch gutter sections shall be used in all commercial sites unless otherwise stated on plans. On concrete streets, gutter section shall match thickness of street, unless otherwise stated on plans. All curb and gutter constructed on a straight line or on a curve shall be considered standard curb and gutter.

603-3.3 MOUNTABLE CURB AND GUTTER. The work to be completed under this item shall be one-course, reinforced or unreinforced concrete construction as shown on the standard details as a combined mountable curb and gutter section. All mountable curb and gutter constructed on a straight line or on a curve under this item shall be classified as mountable curb and gutter.

603-4 CONSTRUCTION REQUIREMENTS

Construction requirements shall conform to Subsection 501-3 with the following additional provisions:

603-4.1 GENERAL. The curb and curb and gutter constructed under this item shall be one-course concrete construction.

When curb and gutter sections are removed for repairs or new construction of driveways or a valley gutter, the curb and gutter shall be removed to the nearest joint or as directed by the ENGINEER. If the existing curb is cracked, the cracked joint shall be sawed. The sawed joint shall be no closer than 5 feet to the existing joint in place. All jagged joints shall be sawed. Sawing shall be incidental to other bid items.

When new curb and gutter is installed, and ends do not tie into an existing curb, the ends of the curb and gutter shall have the curb tapered down from 6 inches to 1 inch for 2 feet in length.

603-4.2 FORMS. Forms for use on curves shall be capable of installation to within 1/2 inch of the true curve, and if the radius is less than 400 feet, they shall be either flexible material or shaped to fit the curve. On small radius curves such as driveways and street intersections, the CONTRACTOR may use Masonite or approved equivalent, metal, or 1/2 inch dimension lumber.

603-4.3 DOWEL BARS. All dowel bars as detailed shall be considered incidental to each item of curb or curb and gutter construction.

603-4.4 DOWELED EXPANSION JOINTS. Doweled expansion joints shall consist of two (2) dowels and one (1) expansion boot, three (3) reinforcement bars, and one (1) expansion boot in accordance with Subsections 501-2.8 "Expansion Joint Material" or 501-2.10 "Reinforcing Steel." Doweled expansion joint boots shall be 1/2 to 1/4 inch lower than the surfaces of the top of the curb and gutter.

One (1) doweled expansion joint shall be placed every 100 feet on any new or repaired curb and gutter sections and at both ends of street intersection radii or as determined by the ENGINEER.

Every attempt should be made to center or position the doweled expansion joint to improve the overall appearance of the curb and gutter section.

603-4.5 SURFACE FINISH. The final surface finish shall be obtained by uniformly brushing or brooming the surface. No plastering will be permitted unless approved by the ENGINEER.

603-4.6 BACKFILL. The curbing shall be backfilled within 14 days of placement to a level width of at least 2 feet along the front of the gutter and back of the curb to a height equal to the top finished grade of the curbing. The backfill shall be compacted in accordance with Section 202 "Excavation and Embankment."

603-4.7 CONTRACTOR'S STAMP OR NAME PLATE. CONTRACTOR shall mark every 100 linear feet for continuous pours of new curb and gutter laid, and every curb and gutter patch done per city lot, by stamping or by inlaying an approved metal plate conforming to Subsection 501-3.

603-4.8 CURB OR CURB AND GUTTER REMOVAL. All curb or curb and gutter removed shall be disposed of in accordance with Subsection 501-3.

603-4.9 CURB AND GUTTER EXTRUSION MACHINE. This type of machine shall be capable of producing concrete curb, curb and gutter, or mountable curb and gutter to conform to the requirements of this section and line, grade, shape, and dimensions given in the plans and specifications or approved by the ENGINEER using materials conforming to the specifications.

The CONTRACTOR shall provide the ENGINEER with the following information prior to being given permission to produce a test section with the machine:

1. Complete machine specifications regarding the machine and its performance.

2. Details of the proposed section of curb or curb and gutter to be produced by the machine.

3. Provide evidence of having previous experience of operating and maintaining the proposed machine.

If the above items are found to be satisfactory to the ENGINEER, written permission will be given to the CONTRACTOR to provide a 100-foot test section in place with the proposed machine.

If the manufacture of the test section and the performance of the extrusion machine prove to be satisfactory, the ENGINEER shall then issue final written approval to the CONTRACTOR. If during the course of construction on the project said manufacture and said performance becomes unsatisfactory, the ENGINEER shall disallow the continued use of said machine.

603-4.10 SEALING JOINTS. All expansion joints shall be sealed in accordance with Subsections 501-3 and 501-2.

603-4.11 CONCRETE QUALITY CONTROL AND SUBGRADE TESTING. Testing shall meet the requirements of Subsection 501-3. Payment shall be considered incidental.

603-5 MEASUREMENT AND PAYMENT

603-5.2 STANDARD CURB. Standard Curb shall be measured by the linear foot (LF) along face of curb and paid for at the unit price bid for "Standard Curb" complete, in place, and accepted by the ENGINEER.

603-5.3 STANDARD CURB AND GUTTER. Standard Curb and Gutter shall be measured by the linear foot (LF) along face of curb and paid for at the unit price bid for "Standard Curb and Gutter" complete, in place, and accepted by the ENGINEER. When reinforcing steel is required, the reinforcing steel shall be considered incidental.

603-5.4 CURB AND GUTTER (8-INCH GUTTER). Curb and Gutter (8-Inch Gutter) shall be measured by the linear foot (LF) and paid for at the unit price bid for "Curb and Gutter (8-Inch Gutter)" complete, in place, and accepted by the ENGINEER. When reinforcing steel is required, the reinforcing steel shall be considered incidental.

603-5.5 MOUNTABLE CURB AND GUTTER. Mountable Curb and Gutter shall be measured by the linear foot (LF) along flowline and paid for at the unit price bid for "Mountable Curb and Gutter" complete, in place, and accepted by the ENGINEER. When reinforcing steel is required, the reinforcing steel shall be considered incidental.

603-5.6 CURB AND GUTTER REMOVED. Curb and Gutter Removed shall be measured by the linear foot (LF) and paid for at the unit price bid for "Curb and Gutter Removed" complete and approved by the ENGINEER.

SECTION 800

SEWERS

SECTION 801 − SANITARY SEWER

801-1 DESCRIPTION

This item shall consist of pipe of the types, classes, sizes, and dimensions required on the plans, and furnished and installed at the places designated on the plans and profiles or by the ENGINEER in accordance with these specifications and with the lines and grades given.

The bid price per linear foot of pipe in place shall include the cost of excavation and backfill, the cost of furnishing and installing all trench bracing, all fittings required to complete the sewer pipe as shown on the plans, and the material for and the making of all joints, including all connections to existing sewer pipe and manholes.

"Unstable," "Unsuitable," "Suitable," and "Unsatisfactory" soil or aggregate items shall be defined as stated in Subsection 202.1.

801-2 MATERIALS

801-2.1 GENERAL. The pipe shall be of the type selected by the CONTRACTOR and shall be in accordance with the following appropriate requirements unless otherwise specified.

801-2.2 CONCRETE SANITARY SEWER PIPE. Concrete sanitary sewer pipe, reinforced, shall conform to the requirements of ASTM C76.

801-2.3 POLYVINYL CHLORIDE SANITARY SEWER PIPE. Polyvinyl chloride sanitary sewer (PVC) pipe 15 inches or smaller shall conform to the requirements of ASTM D3034 for type PSM. PVC sewer pipe and fittings with a bury depth less than 18 feet shall have an SDR of 35. PVC sewer pipe with a bury depth equal to or greater than 18 feet shall have an SDR of 26. Pipe must be of the same type and have the same SDR for full run lengths between manholes. Pipe specifications must be stamped on the pipe.

Polyvinyl chloride sewer pipe 18 inches or larger shall conform to the requirements of ASTM F679-PS46. PVC sewer main line pipe and PVC sewer service pipe shall have the elastomeric gasket-type joint providing a watertight seal. A solvent cement-type joint will not be allowed. PVC wye branches shall be of the "factory assembled type."

801-2.4 RUBBER GASKET JOINT FOR CONCRETE SANITARY SEWER PIPE. Rubber-type gaskets for concrete non-pressure pipe shall conform to the requirements of ASTM C443 or ASTM C361.

801-2.5 MORTAR. Mortar for connections to manholes shall be composed of one part, by volume, of portland cement and two parts of mortar sand. The portland cement shall conform to the requirements of Subsection 501-2.2. The sand shall conform to the requirements of Subsection 501-2.5. Hydrated lime may be added to the mixture of sand and cement in an amount equal to 15 percent of the weight of cement used. The hydrated lime shall meet the requirements of ASTM C6.

801-2.6 RUBBER GASKET JOINT FOR PVC SEWER PIPE. Rubber gaskets for PVC sewer pipe joints shall be of the elastomeric type providing a watertight seal and shall conform to ASTM D3212.

801-2.7 CONCRETE. Concrete for pipe cradles and saddles shall conform to the requirements of Section 501.

801-2.8 BEDDING MATERIAL. The bedding material shall consist of granular material in accordance with the requirements for gradation shown in the following table:

Square Mesh Sieve Size	**Percent by Weight Passing**
2”	100%
1”	90-100%
3/4”	80-100%
No. 4	30-90%
No. 30	10-60%
No. 100	0-15%

One gradation test shall be made for each source and change in material provided for each 500 tons of screened and/or blended material and for each 200 tons of non-screened or “bank run” material. Gradation testing shall be incidental to the pipe or other bid items.

The CONTRACTOR may provide a controlled density fill in lieu of the bedding material bed for underground pipe if approved by the ENGINEER prior to installation. The controlled density fill shall conform to Section 503.

If the controlled density fill is placed in the trench in a plastic state, the remaining backfill may not be completed for 48 hours. One compression test shall be made for each 60 cubic yards of control density fill or a minimum of one per day. A testing firm normally engaged in materials testing shall make the test at the expense of the CONTRACTOR. The CONTRACTOR shall remove and replace any material not meeting the requirements at CONTRACTOR's expense. All controlled density fill shall be designed for easy removeability should it become necessary to repair or remove the pipe in the future. The pipe shall be protected from floating to maintain line and grade.

Controlled density fill shall be paid as bedding material unless otherwise specified. Controlled density fill utilized on the remainder of the trench may be provided incidental if approved by the ENGINEER.

Bedding quantities are based on trench width in Subsection 801-3.2 “Excavation and Preparation of Trench.” Any additional bedding material due to a wider ditch shall be the responsibility of the CONTRACTOR.

801-2.9 SUBCUT GRAVEL. The subcut gravel shall consist of granular material in accordance with the requirements of gradation shown in the following table:

Square Mesh	**Percent by Weight Passing**
2”	100%
No. 4	0-10%

801-2.10 MARKING TAPE. The CONTRACTOR will be required to furnish and install marking tape located 2 feet above the top of all sanitary sewer mains installed under the contract. The tape shall be of the non-detectable type and shall have a minimum width of 5 inches. The tape shall be green in color with the words "CAUTION SEWER LINE BELOW" imprinted on the tape in black capital letters. The marking tape shall be equal to that manufactured by Presco standard grade.

Cost of marking tape and installation shall be considered incidental to other items.

801-2.11 SANITARY SEWER FORCE MAIN MATERIALS. All materials for construction of sanitary sewer force mains shall conform to Section 901 “Water Mains.”

801-2.12 SANITARY SEWER WYE BRANCHES. Wye branches shall be of the same material as the main line sanitary sewer pipe.

801-3 CONSTRUCTION REQUIREMENTS

801-3.1 EQUIPMENT. All equipment necessary and required for the proper construction of sanitary sewers shall be on the project in first-class working condition and approved by the ENGINEER before construction is permitted to start.

The CONTRACTOR shall handle the pipe while unloading and placing it in its final position without damage to the pipe.

The CONTRACTOR shall provide methods and means to obtain the required compaction of the pipe bed and the backfill as specified.

The CONTRACTOR shall provide a sufficient number of watertight sewer plugs to prevent infiltration of water and any other foreign material from entering the existing sewer system and the newly constructed sewer lines.

801-3.2 EXCAVATION AND PREPARATION OF TRENCH. The trench shall be dug to the alignment and depth required and only so far in advance of pipe laying as the ENGINEER may permit. The discharge from pumps shall be led to natural drainage channels, drains, or storm sewer as per erosion control and storm water pollution control standards.

The trench width may vary depending upon the depth of the trench and the nature of the excavated material, but in any case shall be of ample width to permit the pipe to be laid and joined properly and the backfill to be placed and compacted to the required density. The maximum width of trench for calculating bedding material quantities for pipe sizes 15 inches and larger shall not be more than 36 inches greater than the outside diameter of the pipe barrel. For pipe sizes under 15 inches, the maximum width shall be no more than 48 inches.

The trench shall be excavated below the required grade so that the pipe may be laid on 4 inches of bedding material. See Standard Detail 801-2.

Where the bottom of the trench uncovered at subgrade is unsuitable and, in the opinion of the ENGINEER, cannot support the pipe, further depth and/or width shall be excavated and refilled to the pipe foundation grade with subcut gravel thoroughly compacted. In this instance, subcut gravel shall be considered a pay item.

If other approved means shall be adopted to assure a firm foundation for the pipe, the CONTRACTOR will be allowed extra compensation. Extra compensation shall not be allowed for extra excavation and gravel used for seepage and ground water control.

If ordered in writing by the ENGINEER, the CONTRACTOR will be paid for any sheathing that the ENGINEER orders left in the trench in order to protect existing utilities or other items. The price to be paid for such sheathing material will be the current invoice price of said materials or such lesser price as the CONTRACTOR and the ENGINEER may agree that the material is worth at the time it is left in the trench.

All broken pavement or sidewalks shall be removed from the site of the work and deposited at a place approved by the ENGINEER. It shall be the responsibility of the CONTRACTOR to remove and replace at its own expense all sidewalk and curb and gutter necessary for the installation of the pipe and manholes as shown on the plans and as directed by the ENGINEER, unless items are noted on plans. The removal shall be complete to the nearest joint. No additional compensation will be allowed for this work and shall be included in the price bid for pipe or manhole installation. Replacement of sidewalk and curb and gutter shall be as per Section 600.

Bell holes of ample dimension shall be dug in earth trenches at each joint to permit the joints to be made properly.

All excavated material shall be piled in a manner that will not endanger the work and that will avoid obstructing sidewalks and driveways. Gutters shall be kept clean or otherwise satisfactory provisions made for street drainage.

The use of trench digging machinery will be permitted except in places where operation of same will cause damage to trees, buildings, or existing structures above or below ground, in which case hand methods shall be employed.

The CONTRACTOR is assumed to be familiar with all federal, state, and local laws, codes, ordinances, and regulations which in any manner affect those engaged or employed in the work, the material, or equipment used in or upon the site, or in any way affect the conduct of the work. No pleas of misunderstanding or ignorance on the part of the CONTRACTOR will, in any way, serve to modify the provisions of the contract. The CONTRACTOR shall provide and maintain on a 24-hour basis all necessary safeguards such as watchmen, traffic control devices, and night lights at CONTRACTOR's expense in accordance with Subsection 103-5.

Excavation for pipe laying operations shall be conducted in a manner so as to cause the least interruption to traffic. Where traffic must cross open trenches, the CONTRACTOR shall provide suitable bridges at street intersections and driveways. Hydrants under pressure, valve boxes, curb stop boxes, and other utility controls shall be left unobstructed and accessible during the construction period.

Adequate provisions shall be made for the flow of sewers, drains, and water courses encountered during construction, and the structures which may have been disturbed shall be satisfactorily restored upon completion of the work.

Prior to making any connections to the existing sanitary sewer system, the CONTRACTOR shall furnish and install watertight plugs in such a manner as to prevent infiltration and foreign material from entering the existing sewer system. The plugs shall be installed so as to not disrupt existing sewage flow and shall remain in place until the construction has been accepted by the ENGINEER.

Trees, fences, poles, and all other property shall be protected unless their removal is authorized by the ENGINEER, and any property damages shall be satisfactorily restored by the CONTRACTOR. The cost of removal shall be included in the price bid per linear foot of sewer pipe in place unless listed separately in the proposal. Tree removal and root cutting shall be in conformance with Section 201.

801-3.3 ROCK EXCAVATION. All rock found in the trench area shall be classified as solid rock and measured for payment if each individual rock, boulder, or continuous slab of ledge rock is 1 cubic foot or more in content. Solid rock shall be measured for payment on the basis of and limited to the maximum trench width allowed under Subsection 801-3.2 "Excavation and Preparation of Trench." If solid rock extends below the necessary depth of excavation, it shall be measured for payment to a horizontal plane 6 inches below the bottom of the pipe. All rocks smaller in volume than 1 cubic

foot shall not be classified as solid rock, but may be used in backfilling as directed by the ENGINEER.

Whenever ledge rock is encountered, the CONTRACTOR shall strip all overlying earth and he shall then notify the ENGINEER that the rock is ready for measurement. The ENGINEER may then take levels upon the rock or he may at his discretion defer measurement until after the excavation is completed. CONTRACTOR shall not refill any trench where rock is encountered until notified by the ENGINEER that measurement has been made. Payment will not be allowed for any rock unless measurement has been made as herein provided. The rock shall be excavated to a depth of 6 inches below the bottom of the pipe, and the trench shall be refilled to the proper grade with bedding material.

All rock found in the trench having greater volume of 1 cubic foot shall not be used as backfill but shall be disposed of as directed by the ENGINEER.

801-3.4 PIPE LAYING. All watermain and sanitary sewer crossings shall conform to the following policy:

1. Where both water and sewer are of new construction:

    a. No additional protections needed if water main crosses at least 5 feet above the sewer.

    b. If the water main crosses within 3 to 5 feet above the sewer, a full length of water main shall be centered over the sewer.

    c. If the water main crosses within 3 feet above the sewer, a full length of water main shall be centered over the sewer, and the sewer joints located within 10 feet of the crossing shall be able to withstand 25 psi internal pressure.

2. Where water main crosses over an existing sewer:

    a. No additional protection needed if water main is at least 3 feet above the sewer. The intervening dirt must be left undisturbed.

    b. If crossing is within 3 feet above sewer, a full length of water main must be centered over the sewer main.

3. Where water main crosses under the sewer:

    a. In all cases, additional protection shall be provided by centering a full length of water main under the sewer main. All sewer joints located within 10 feet of the crossing shall be able to withstand 25 psi internal pressure.

Proper implements, tools, and equipment satisfactory to the ENGINEER shall be provided and used by the CONTRACTOR for the safe and convenient prosecution of

the work. All pipe and fittings shall be carefully lowered into the trench piece by piece by means of a derrick, ropes, or other suitable tools or equipment in such a manner as to prevent damage to the pipe. Under no circumstance shall pipe be dropped or dumped into the trench.

After the trench has been excavated to the proper grade, the first pipe at the outlet end of the sewer shall be bedded to the proper line and grade with the bell end upstream. All pipe shall be laid to line and grade. The pipe shall be held in place by backfilling along the bottom and sides of the pipe section with bedding material thoroughly tamped up to the centerline of the pipe and protected from movement.

During the pipe laying operation, the CONTRACTOR shall have a watertight plug available to install in the last pipe laid at the end of each work day, or to install during the work day, to prevent water or other foreign material from entering the newly installed pipe.

The CONTRACTOR shall exercise due care so as to prevent water and other foreign matter from entering the newly constructed sewer mains at new manhole locations.

All joints shall be installed in accordance with the pipe manufacturer's instructions.

Where polyvinyl chloride sewer pipe is installed in a vitrified clay sewer line, V.C. to PVC adaptors shall be used at each junction. Adapters shall be Shear Guard repair couplers as manufactured by Indiana Seal, or approved equivalent.

The cost of adapters shall be considered incidental to the unit price bid for cast iron sewer pipe or polyvinyl chloride sewer pipe.

The interior of the pipe shall be cleaned as the work progresses. The manholes and sewer pipe shall be flushed with clean water after completion and prior to acceptance by the ENGINEER.

All connections to existing utilities shall be considered incidental to other bid items.

801-3.5 BACKFILLING OF PIPE TRENCH. After the pipe has been laid to line and grade, the trench shall be backfilled under and along the sides of the pipe up to the centerline of the pipe by thoroughly compacting bedding material into place so as to form a uniform bed for the pipe. The compaction may be obtained by any approved method or equipment which will produce a uniform density meeting the requirement to obtain not less than 85 percent maximum dry density at optimum moisture made in accordance with ASTM D1557. Care shall be exercised not to displace the pipe or damage the pipe during the compaction operations. If the material in the trench is sand or gravel and acceptable to the ENGINEER, it will not be necessary to furnish any other material than that found within the trench to backfill up to the centerline of the pipe. If sand or gravel is not found within the trench, the CONTRACTOR will be required to furnish bedding material as per Pipe Bedding Standard Plate.It will be required to keep

the bedding completed within 3 lengths of the last pipe being laid and shall all be completed at the end of each day's work.

After bedding operations, the trench shall be backfilled to a point 4 feet below finish grade by any approved method or equipment which will produce a uniform density meeting the requirements to obtain not less than 85 percent of the maximum dry density at optimum moisture as determined by ASTM Compaction Control Test Designation D1557.

The use of drop pile hammers, loaded or unloaded clam shells or backhoe buckets, or other similar equipment will not be permitted to obtain the required density. The CONTRACTOR shall use specialized equipment or hand tamping around appurtenances such as manholes to ensure proper density. The remaining trench shall be backfilled in accordance with the specifications for the class of backfill as set forth in Subsection 801-3.6. The areas for each class of backfill specified shall be designated on the plans.

The CONTRACTOR shall engage an independent soils testing laboratory, approved by the ENGINEER, to determine the soil moisture density relationships and perform the required compaction testing.

The compaction control tests for this section are based on one individual compaction test per 300 feet of trench per 36 inches of backfill or where directed by ENGINEER. Compaction tests shall be taken for service lines a minimum of one test per line, 2 feet below finish grade or as directed by ENGINEER. The CONTRACTOR shall be responsible for all retesting of failing tests and a proctor determination to represent each soil condition to be encountered on the project. The time, locations, depths, and frequency of compaction testing shall be at the discretion of the ENGINEER during construction. Should it become necessary to require an additional number of initial compaction tests, over and above the number specified for bidding purposes, the ENGINEER will assume the responsibility to perform said additional testing. The CONTRACTOR, however, will be required to assume the cost of all retesting of failing tests regardless of the total number required during construction.

Compaction testing to determine densities may be accomplished with a nuclear density testing apparatus and/or the sand cone method. Should disputes arise concerning test results, they will be resolved by using the sand cone method.

Written reports of all test results shall be supplied to the ENGINEER and the CONTRACTOR by the testing laboratory as soon as possible.
The availability of the independent testing laboratory when needed and speed of testing and reporting are to be considered the responsibility of the CONTRACTOR.

Compaction control tests as stated above shall be incidental to other bid items.

All excess dirt and rock must be removed from the streets and disposed of at such places as the ENGINEER may direct.

The CONTRACTOR shall restore all shrubbery, fences, sod, or other surfaces disturbed to a condition equal to that before the work began, furnishing all labor and material incidental thereto. If the area cannot be restored to the original line and cross section without the aid of grade stakes, they will be furnished by the ENGINEER at the CONTRACTOR expense.

Following the certification of completion by the ENGINEER, the CONTRACTOR shall maintain the surface of unpaved trenches, adjacent curbs and gutters, sidewalks, driveways, shrubbery, fences, sod, or other surfaces disturbed for a period of 3 months thereafter. All material and labor required for maintenance of the trenches and adjacent structures shall be supplied by the CONTRACTOR and the work done in a manner satisfactory to the ENGINEER. The cost of backfilling and cleanup shall be included in the price per linear foot of sewer pipe in place.

801-3.6 BACKFILL CLASSIFICATIONS. The top 4 feet of backfill below finish grade shall meet the requirements of the backfill classification as per plans, if no backfill class is specified, backfill shall be Class A. Any costs associated with obtaining moisture requirements shall be incidental.

(a) Class AA Backfill. Class AA backfill shall be used in areas where the trenches fall beneath special improved areas and under special conditions, and these areas shall be indicated as Class AA backfill and shown on the plans. Under Class AA backfill all the excavated material shall be transported to another site and wasted in a workmanlike manner, and selected material meeting bedding material specifications shall be imported to the site for backfill material.

After the pipe has been inspected and bedded with bedding material, and upon completion and approval for the initial backfill requirements specified under Subsection 801-3.5, the remaining trench shall be backfilled in layers and compacted by any approved method or equipment which will produce a uniform density meeting the requirements to obtain not less than 95 percent maximum dry density at optimum moisture in accordance with ASTM D1557.

(b) Class A Backfill. Class A backfill shall be used in areas where trenches fall beneath improved areas or areas to be improved, and these areas shall be indicated as Class A backfill and shown on the plans.

After the pipe has been inspected and bedded with bedding material, and upon completion and approval of the initial backfill requirements specified under Subsection 801-3.5, the remaining trench shall be backfilled in layers and compacted by any approved method or equipment which will produce a uniform density meeting the requirement to obtain not less than 85 percent maximum dry density at optimum moisture made in accordance with ASTM D1557, except for the top 4 feet of the trench which shall meet the requirement to obtain not less than 90 percent at maximum dry density with a moisture content falling within plus or minus 3 percent of the optimum moisture made in accordance with ASTM D1557.

(c) Class B Backfill. Class B backfill shall be used in areas where the trenches fall beneath improved areas or areas to be improved, and these areas shall be indicated as Class B backfill and shown on the plans.

After the pipe has been inspected and bedded with bedding material, and upon completion and approval of the initial backfill requirements specified under Subsection 801-3.5, the remaining trench shall be backfilled in layers and compacted by any approved method or equipment which will produce a uniform density meeting the requirement to obtain not less than 80 percent of maximum dry density at optimum moisture made in accordance with ASTM D1557, except for the top 4 feet of trench which shall meet the requirement to obtain not less than 85 percent of maximum dry density at an optimum moisture in accordance with ASTM D1557.

(d) Class C Backfill. Class C backfill shall be used in areas where the trenches fall beneath improved areas or areas to be improved, and these areas shall be indicated as Class C backfill and shown on the plans.

After the pipe has been inspected and bedded with bedding material, and upon completion and approval of the initial backfill requirements specified under Subsection 801-3.5, the remaining trench shall be backfilled in layers and compacted by any approved method or equipment which will produce a uniform density equal to the adjacent undisturbed soil but not to exceed 85 percent of maximum dry density at optimum moisture made in accordance with ASTM D1557.

(e) Class D Backfill. Class D backfill shall be used in unimproved areas. These areas shall be indicated as Class D backfill and shown on the plans. After the pipe has been inspected and bedded with bedding material and upon completion and approval of the initial backfill requirements specified under Subsection 801-3.5, the remaining trench shall be backfilled in 24 inch to 36 inch layers compacted by any approved method or equipment which will obtain a uniform density.

801-3.7 CONNECT TO MANHOLE. Connections to existing structures and new manholes, which are not pre-formed, for sanitary sewer shall be core drilled unless otherwise approved by the ENGINEER. Connections shall be made with flexible pipe to manhole connector (rubber boot) or with PVC manhole adaptor (per Subsection 1205-3.10). If connector is used, two bands shall be required to secure boot to pipe.

801-3.8 PROTECTING UNDERGROUND AND SURFACE STRUCTURES. Temporary support, adequate protection, and maintenance of all underground and surface structures, culverts, storm sewer, sanitary sewer, watermain, service connections for both sewer and water, and other obstructions encountered in the progress of the work shall be furnished by the CONTRACTOR all at its own expense as approved by the ENGINEER.

(a) Deviations Occasioned by Other Utility Structures. Wherever existing utility structures or branch connections leading to main sewer or water mains or other

conduits, ducts, pipes, or structures form obstructions to the grade and alignment of the sewer to be laid, they shall be permanently supported, removed, relocated, or reconstructed by the CONTRACTOR through cooperation with the Owner of the utility, structure, or obstruction involved. In those instances where their relocation or reconstruction is impracticable, a deviation from the line and grade will be ordered by the ENGINEER, and the change shall be made in the manner directed by the ENGINEER.

Wherever possible, all existing utility structures, or branch connections leading therefrom, will be located in advance of the excavation of the trench and properly marked. The CONTRACTOR shall not cut any existing utility lines unless it is determined by the ENGINEER that it is necessary in order to install the new sewer pipes. All utility lines that are cut by the CONTRACTOR with the approval of the ENGINEER shall be repaired or replaced by the CONTRACTOR as Extra Work. All utility lines that are damaged by the CONTRACTOR shall be repaired or replaced by the CONTRACTOR at the CONTRACTOR's expense.

Wherever the ENGINEER shall determine it is necessary to remove or relocate any existing utility in order to properly install the new sewer pipe, the change shall be made in a manner directed by the ENGINEER and for which extra compensation will be allowed the CONTRACTOR.

(b) Deviation Without Engineer's Consent. No deviation shall be made from the required line and grade established by the ENGINEER without the consent of the ENGINEER.

(c) Subsurface Explorations. Whenever necessary to determine the location of existing pipes, valves, or other underground structures, the CONTRACTOR, after examination of available records and upon written order from the ENGINEER, shall make all exploration and excavations for such purpose for which the ENGINEER may allow extra compensation.

801-3.9 CIRCULAR DEFLECTION TEST. All flexible pipe of 8 inches in diameter or larger shall be tested by the CONTRACTOR to ensure that circular deflections do not exceed the maximum allowable deflection. Maximum allowable deflections shall be governed by the mandrel requirements stated herein and shall nominally be 5 percent.

The maximum average inside diameter shall be equal to the average outside diameter per applicable ASTM Standards minus 2 minimum wall thicknesses per applicable ASTM Standards. Manufacturing and other tolerances shall not be considered for determining maximum allowable deflections.

Deflection tests shall be performed a minimum of 30 days after the pipe has been fully backfilled and received passing compaction tests per Subsection 801-3.5 “Backfilling of Pipe Trench.”

The mandrel shall be pulled through the pipe by hand to ensure that maximum allowable deflections have not been exceeded. Prior to use, the mandrel shall be certified by the ENGINEER. If the mandrel fails to pass through the pipe, it will be deemed to be overdeflected.

The mandrel shall be a rigid, nonadjustable, 9-leg minimum mandrel having an effective length not less than its nominal diameter. It shall have a minimum diameter, at any point along the full length, as specified by the ENGINEER. The mandrel shall be fabricated of steel or aluminum and shall have pull rings at either end. The mandrel shall be stamped or engraved indicating the pipe material specification, nominal size, and mandrel outside diameter. The maximum average inside diameter of the pipe shall be measured and calculated by the ENGINEER in the field prior to installation.

Unless otherwise permitted by the ENGINEER, any overdeflected pipe shall be uncovered and, if not damaged, removed and reinstalled. Damaged pipe shall be removed from the work site and replaced with new pipe. Any pipe requiring replacement shall be retested at the expense of the CONTACTOR.

All costs incurred by the CONTRACTOR attributable to mandrel and deflection testing, including any delays and reinstallation of deflected pipe, shall be considered incidental to the installation of the pipe.

801-3.10 LEAKAGE TESTS. The CONTRACTOR shall provide one of either a Hydrostatic Test or an Air Test as specified below:

Hydrostatic Test
The CONTRACTOR shall perform an exfiltration or infiltration test with a minimum positive head of 2 feet.

Allowable exfiltration or infiltration shall not exceed 100 gallons per inch of internal pipe diameter, per mile, per day.

Air Test
The CONTRACTOR shall conduct an air test, as a minimum, conforming to the test procedure as described in ASTM F1417 for plastic pipe. For other materials, test procedures shall be approved by the ENGINEER.

801-3.11 TELEVISE SEWER MAIN. All newly constructed sanitary sewer mains shall be televised. If not specified as a bid item, the televising shall be considered incidental to the price bid for the sanitary sewer installation. After flushing the sewer main, under Subsection 801-3.4, the CONTRACTOR shall have the sewer main televised and recorded by a firm normally engaged in such type of work. The CONTRACTOR shall provide a high-quality digital video with a report for each section of sewer main televised. The recording shall be clearly marked as to the project number and recording number. The recording shall describe locations and conditions of the sewer and shall have a visual footage counter showing the distance of the camera from the manhole. After the CONTRACTOR has submitted the recordings and report, they will be viewed

by the ENGINEER for acceptance. Any sewer failing inspection shall be replaced and re-televised at the expense of the CONTRACTOR.

801-3.12 CLEANOUT. Cleanouts shall be constructed in accordance with the standard detail 801-1.

801-3.13 SANITARY SEWER FORCE MAIN. The construction requirements for sanitary sewer force mains shall comply with Section 901 “Water Mains,” with the exception of the hydrostatic pressure tests, disinfection, and bacteriological testing. The hydrostatic pressure test shall be the same as Section 901 “Water Mains,” except the hydrostatic pressure test shall be 125 pounds per square inch and shall be held for 2 hours. No pipe disinfection or bacteriological testing shall be required.

801-3.14 CONNECTION TO EXISTING SEWER MAIN. Whenever a wye branch is not available for a sewer service connection, the connection to the sewer main shall consist of one of the following:

(a) A “factory assembled” wye branch may be cut into an existing PVC sewer main using gasketed repair couplings to the existing PVC sewer main.

(b) A “factory assembled” wye branch may be cut into an existing VC sewer main using Shear Guard couplings, or approved equivalent, to the existing VC sewer main.

(c) PVC, VC, or RC sewer main may be connected to the existing VC sewer main service using an Inserta Tee as manufactured by Inserta Fittings Co., or approved equivalent. The City of Bismarck Public Works Department will make the tap into the existing PVC, VC, or RC sewer main. Call to schedule and for the current price of tap.

801-3.15 WYE BRANCH LOCATIONS. Wye branches shall be marked with a 2 inch by 2-inch by 4-foot stake placed perpendicular to the main line sewer at the end of the wye.

801-4 MEASUREMENT AND PAYMENT

801-4.1 thru 4.15 (X)” SANITARY SEWER PIPE.

Sanitary sewer pipe shall meet the requirements of Subsections 801-2.2 and 801-2.3. Sanitary sewer pipe shall be measured by the linear foot (LF) from the centerline of manhole to centerline of manhole and shall be paid for at the unit price bid for "(Size) Inch Sanitary Sewer Pipe" complete, in place, and accepted by the ENGINEER.

801-4.50 thru 4.59 (X)” WYE BRANCH. Wye branches shall be measured on an individual unit basis (EA) and paid for at the unit price bid for "(Size)-Inch Wye Branch" complete, in place, and accepted by the ENGINEER.

801-4.60 BEDDING MATERIAL. Bedding Material gravel shall be measured by the ton and paid for at the unit price bid for "Bedding Material" complete, in place, and accepted by the ENGINEER.

801-4.61 SUBCUT GRAVEL. Subcut Gravel shall be measured by the ton and paid for at the unit price bid for "Subcut Gravel" complete, in place, and accepted by the ENGINEER.

801-4.62 ROCK EXCAVATION. All rock found in the trench area greater than 1 cubic foot shall be classified as Rock Excavation, measured by the cubic yard (CY), and disposed of by the CONTRACTOR or as directed by the ENGINEER.

The CONTRACTOR shall place all rocks greater than 1 cubic foot and less than 1 cubic yard in a pile to be measured by the ENGINEER. The total volume of the stockpile shall be reduced by 25 percent to account for void in the rock stockpile.

All rocks greater than 1 cubic yard shall be individually measured by the ENGINEER.

Payment shall be made at the unit price bid per cubic yard (CY) for "Rock Excavation."

801-4.63 CONCRETE MANHOLES. Concrete Manholes shall be measured and paid for under Subsection 1205-4.1.

801-4.64 TELEVISE SEWER MAIN. Televise Sewer Main shall be measured by the linear foot (LF) from centerline of the manhole to centerline of the manhole or an end point and shall be paid for at the unit price bid for “Televise Sewer Main” complete, and accepted by the ENGINEER.

801-4.65 thru 801-4.68 (X)” CLEANOUT. Cleanouts shall meet the requirements of this section and the standard detail and shall be measured and paid for per each (EA) "(Size)” Cleanout" complete, in place, and accepted by the ENGINEER.

SECTION 802 − STORM SEWER

802-1 DESCRIPTION

This item shall consist of pipe and related items of the types, classes, sizes, and dimensions required on the plans, furnished and installed at the places designated on the plans and profiles, or by the ENGINEER, in accordance with these specifications and with the lines and grades given.

The bid price per linear foot of pipe in place shall include the cost of excavation and backfill, the cost of furnishing and installing all trench bracing, all fittings required to complete the pipe drain, as shown on the plans, and the material for and the making of all joints, including all connections to existing drainage pipe and manholes.

"Unstable," "Unsuitable," "Suitable," and "Unsatisfactory" soil or aggregate items shall be defined as stated in Section 202-1.

802-2 MATERIALS

802-2.1 GENERAL. The pipe shall be of the type called for on the plans or in the proposal and shall be in accordance with the following appropriate requirements.

802-2.2 REINFORCED CONCRETE STORM SEWER PIPE. Reinforced concrete storm sewer pipe shall conform to the requirements of ASTM C76.

Unless otherwise specified, all pipe shall be Class III for 24-inch and smaller and Class II for 27-inch and larger in accordance with ASTM C76, Wall B.

All pipe sections shall be cast in sections 8 feet, 6 feet, or 4 feet long, except that the variable length sections may be cast in order to match at manholes and inlets.

802-2.3 POLYVINYL CHLORIDE STORM SEWER PIPE. Polyvinyl chloride storm sewer (PVC) pipe 15 inches or smaller shall conform to the requirements of ASTM D3034 for type PSM, PVC sewer pipe and shall have an SDR of 35, all of which shall be stamped on the pipe. Polyvinyl chloride sewer pipe 18 inches or larger shall conform to the requirements of ASTM F679-PS46. PVC sewer shall have the elastomeric gasket type joint providing a watertight seal.

802-2.4 CORRUGATED STEEL STORM SEWER PIPE. Corrugated steel storm sewer pipe shall have a zinc coating weight of 2 ounces per square foot and shall conform to the requirements of AASHTO M36. This material may be used if approved by the ENGINEER.

802-2.5 HIGH DENSITY POLYETHYLENE STORM SEWER PIPE High Density polyethylene storm sewer pipe shall be of the quality to that manufactured by ADS/Hancor, or approved equivalent. The pipe shall have a smooth interior and annular exterior corrugations. The 4-inch to 60-inch pipe with integral bell and spigot

joints shall conform to ASTM F2306. The joint shall be soil tight and gaskets shall conform to ASTM F477. Fittings shall conform to ASTM F2306. Bell and spigot connections shall utilize a spun-on or welded bell. Valley or saddle gaskets shall meet the soil-tight performance requirements of ASTM F477.

802-2.6 RIBBED POLYVINYL CHLORIDE STORM SEWER PIPE. Ribbed polyvinyl chloride storm sewer pipe shall be of a quality equal to that manufactured by Extrusion Technologies, Inc. Ultra-Rib, or approved equivalent. The pipe shall meet the requirements of ASTM F794 and shall have a smooth interior. The pipe shall have a bell end and a spigot end which shall be connected using elastomeric gaskets. The pipe stiffness shall be a minimum of 46 psi when tested at 5 percent deflection in accordance with ASTM D2412.

802-2.7 CORRUGATED POLYVINYL CHLORIDE STORM SEWER PIPE. Corrugated polyvinyl chloride storm sewer pipe shall be manufactured by Extrusion Technologies, Inc. Ultra-Corr, or approved equivalent. The pipe shall meet the requirements of ASTM F949 and shall have a smooth interior. The pipe shall have a bell end and a spigot end which shall be connected using elastomeric gaskets. The pipe stiffness shall be a minimum of 50 psi when tested at 5 percent deflection in accordance with ASTM D2412.

802-2.8 PERFORATED PIPE. Perforated concrete pipe in sizes 4 inches and above shall conform to the requirements of ASTM C444, Type 1 or 2. Corrugated HDPE perforated pipe in sizes 3 inches to 6 inches shall conform to ASTM F405. Corrugated HDPE perforated pipe in sizes 8 inches to 24 inches shall conform to ASTM F667. If PVC perforated pipe is selected, it must meet the requirement of Subsection 802-2.6, or an approved equivalent.

802-2.9 (TYPE OF PIPE) ARCH PIPE. Arch pipe shall conform to the same requirements as listed for standard pipe of like material.

802-2.10 FLARED END SECTIONS. Flared end sections shall be RCP material for the flared end section and 2 adjacent pipe sections. The 2 sections and the flared end section shall be tied together using joint ties, or an approved equivalent.

802-2.11 CONCRETE MANHOLES AND INLETS. Concrete manholes and inlets shall conform to Section 1205.

802-2.12 MORTAR. Mortar for pipe joints and connections to other drainage structures shall be composed of 1 part, by volume, of portland cement and 2 parts of mortar sand. The portland cement shall conform to the requirements of Subsection 501-2.2. The sand shall conform to the requirements of Subsection 501-2.5. Hydrated lime may

beaded to the mixture of sand and cement in an amount equal to 15 percent of the weight of cement used. The hydrated lime shall meet the requirements of ASTM C6.

802-2.13 CONCRETE. Concrete for pipe cradles shall conform to the requirements of Section 501.

802-2.14 CONCRETE PIPE JOINTS. Concrete pipe joints for non-pressure pipe shall be sealed with a butyl joint mastic. Butyl joint mastic shall be equal to EZ-STIK as manufactured by the Press-Seal Gasket Corporation, or approved equivalent. The CONTRACTOR shall use 1/2-inch butyl for 12-inch to 18-inch RCP, 3/4-inch for 21-inch to 36-inch RCP, 1-inch for 42-inch to 66-inch RCP, and 1½-inch for 72-inch to 120-inch RCP. Rubber-type gaskets for concrete low-head pressure pipe shall conform to the requirements of ASTM C443 and ASTM 361. if specified.

802-2.15 GASKET JOINT FOR PVC STORM SEWER PIPE. Gaskets for PVC storm sewer pipe joints shall be of the elastomeric type providing a watertight seal.

802-2.16 BEDDING MATERIAL. The bedding material shall be defined as stated in Subsection 801-2.

802-2.17 SUBCUT GRAVEL. The subcut gravel shall be as defined in Subsection 801.

802-2.18 MARKING TAPE. The CONTRACTOR will be required to furnish and install marking tape located 2 feet above the top of all storm sewer mains installed under the contract. In cases where there is less than 30 inches of fill material over the top of the pipe, the tape shall be placed 12 inches from the top of the pipe. The tape shall be of the non-detectable type and shall have a minimum width of 5 inches. The tape shall be green in color with the words "CAUTION SEWER LINE BELOW" imprinted on the tape in black capital letters. The marking tape shall be manufactured by Presco standard grade or approved equivalent

Cost of marking tape and installation shall be considered incidental to other items.

802-2.19 RIPRAP. Rock shall be hard, durable, angular in shape, and free from cracks, overburden, shale, and organic material. The width and the thickness of a single stone shall each be less than one-third the length of the stone. Rock shall not sustain a loss of more than 40 percent after 500 revolutions in an abrasion test conducted in accordance with ASTM C535-69. Rock shall not sustain a loss of more than 10 percent after 12 cycles of freezing and thawing (AASHTO T103 for ledge rock, procedure A). Rock shall have a minimum specific gravity of 2.50.

CONTRACTOR shall be responsible for all costs of testing rock for compliance with these specifications. In lieu of testing proposed rock for compliance with these specifications, rock obtained from County or North Dakota Department of Transportation

approved quarries may be used. All rock materials considered for use as riprap shall have prior approval by the ENGINEER before being placed.

Gradation for riprap are as follows:

Riprap	% Smaller than Given Size by Weight	Intermediate Rock Dimension (Inches)	$^{d}50$* (Inches)
Type VL	70-100	12	–
	50-70	9	–
	35-50	6	6**
	2-10	2	–
Type L	70-100	15	–
	50-70	12	–
	35-50	9	9**
	2-10	3	–
Type M	70-100	21	–
	50-70	18	–
	35-50	12	12
	2-10	4	–
Type H	100	30	–
	50-70	24	–
	35-50	28	18
	2-10	6	–
Type VH	100	42	–
	50-70	33	–
	35-50	24	24
	2-10	9	–

*$^{d}50$ = Mean particle size
**Bury types VL and L with native top soil and revegetate to protect from vandalism.

Riprap fabric shall be used under the riprap as bedding. The fabric shall be nonwoven geotextile fabric Amoco 4551 or approved equivalent. Riprap fabric shall be installed in accordance with manufacturer's recommendations. All costs for providing and installing the riprap fabric shall be incidental to the riprap.

Hand placement of riprap may be required to ensure an acceptable gradation, uniform surface, and to fill gaps between larger rocks to cover any exposed riprap fabric.

Because of this relatively small size and weight, Type VL riprap and Type L riprap shall be buried with topsoil and revegetated. All items shall be considered incidental to the bid price for riprap.

Riprap shall be measured by the ton and paid for at the unit price bid for "Riprap - Type ( )" complete, in place, and accepted by the ENGINEER.

802-2.20 RIPRAP GROUT. Riprap grout shall be installed on a 4-inch thick layer of granular material. The granular material shall be in accordance with Subsection 801-2.9 “Bedding Material.” The riprap prior to the grout placement must be as clean as practical. The grout shall be delivered to the place of final deposit by means that will ensure uniformity and prevent segregation of the grout. Placing of grout shall be obtained by pumping under pressure through a 2-inch maximum diameter hose to ensure complete penetration of the grout into the rock layer. A vibrator is to be employed near the nozzle during placement to aid the flow of the grout. The excess grout must be removed immediately by washing to leave a clean rock face exposed. Grout shall fill the voids to within approximately 4 inches of the riprap surface. The recommended minimum grout specifications include entrained air, a 28-day strength of at least 2,400 pounds per square inch, and a high slump (5-7 inches) in order to penetrate either the full depth of the riprap layer or at least 2 feet where the riprap layer s thicker than 2 feet. Concrete having maximum aggregate size of 3/4 inch may be substituted for grout when using Type M riprap or larger.

802-2.21 CULVERTS. Culverts installed within CITY right-of-way shall be reinforced concrete pipe (RCP) or corrugated steel storm sewer pipe.

802-3 CONSTRUCTION REQUIREMENTS

802-3.1 EQUIPMENT. All equipment necessary and required for the proper construction of storm sewers shall be on the project in proper working condition and approved by the ENGINEER before construction is permitted to start.

The CONTRACTOR shall provide appropriate hoisting equipment to handle the pipe while unloading and placing it in its final position without damage to the pipe.

The CONTRACTOR shall provide method and means to obtain the required compaction of the pipe bed and the backfill as specified.

The CONTRACTOR shall provide a sufficient number of watertight sewer plugs to prevent infiltration of water and any other foreign material from entering the existing sewer system and the newly constructed sewer lines.

802-3.2 EXCAVATION AND PREPARATION OF TRENCH. Excavation and preparation of the trench for storm sewer construction shall conform to Subsection 801-3.2 with the following additions:

HDPE sewer pipe shall have bedding material installed to 6 inches over the top of the pipe. Bedding material from the center of the pipe to 6 inches over the pipe shall be considered incidental to the pipe items.

If perforated storm drain is installed, the fine aggregate shall conform to Subsection 802-3.7.

802-3.3 ROCK EXCAVATION. The rock excavation shall conform to Subsection 801-3.3.

802-3.4 PIPE LAYING. Pipe laying shall conform to Subsection 801-3.4 with the following additions:

Connections between HDPE and RCP shall be made using an internal coupler spigot adaptor equivalent to the Mar-Mac Coupler manufactured by Advanced Drainage Systems per Detail No. 802-2. This work shall be incidental to the storm sewer pipe.

802-3.5 SIX-INCH CLEANOUT - IN-LINE. Where shown on the plans, storm sewer in-line cleanouts shall be constructed according to the corresponding Detail (802-3) in the City of Bismarck Construction Specifications and conform to the following criteria. The pipe shall be polyvinyl chloride sanitary sewer (PVC) pipe. Pipe that is 15 inches or smaller shall conform to the requirements of ASTM D3034 for TYPE PSM, PVC sewer pipe and fittings and shall have an SDR of 35, all of which shall be stamped on the pipe. Polyvinyl chloride sewer pipe 18 inches or larger shall conform to the requirements of ASTM F679-PS46. PVC sewer main line pipe and PVC sewer service pipe shall have the elastomeric gasket-type joint providing a watertight seal. A solvent cement-type joint will not be allowed. PVC wye branches shall be of the "factory-assembled type." The top of the pipe shall have a PVC threaded clean out adapter with a PVC threaded plug placed under a Neenah No. R-1976 or East Jordan Iron Works No. 1578 or approved equivalent cover set in concrete as per the aforementioned detail.

802-3.6 SIX-INCH CLEANOUT - END OF RUN. Where shown on the plans, storm sewer end-of-line cleanouts shall be constructed according to the corresponding detail (802-4) in the City of Bismarck Construction Specifications and conform to the following criteria. The pipe shall be polyvinyl chloride sanitary sewer (PVC) pipe. Pipe that is 15 inches or smaller shall conform to the requirements of ASTM D3034 for type PSM, PVC sewer pipe and fittings and shall have an SDR of 35, all of which shall be stamped on the pipe. Polyvinyl chloride sewer pipe 18 inches or larger shall conform to the requirements of ASTM F679-PS46. PVC sewer main line pipe and PVC sewer service pipe shall have the elastomeric gasket-type joint providing a watertight seal. A solvent cement-type joint will not be allowed. The PVC 90 degree bend shall be a sweeping bend; right angle bends will not be accepted. The top of the pipe shall have a PVC threaded clean out adapter with a PVC threaded plug placed under a Neenah No. R-1976 or East Jordan Iron Works No. 1578 or approved equivalent cover set in concrete as per the aforementioned detail.

802-3.7 DRAINAGE AGGREGATE. The drainage aggregate shall meet either of the gradations in the following table.

NDDOT Class 43	
Sieve Size	**Percent Passing**
3/8”	100
No. 4	20-70
No. 8	0-17
No. 200	0-2
Shale	8.0%

NDDOT Class 2	
Sieve Size	**Percent Passing**
3/4”	100
3/8”	50-95
No. 10	0-15
No. 30	0-4

802-3.8 BACKFILLING OF PIPE TRENCH. Backfilling shall conform to Subsection 801-3.5 with the following additions:

When backfilling perforated pipe, the CONTRACTOR shall backfill with fine aggregate conforming to Subsection 501-2.5 to a point 2 feet below the finished surface. The remaining 2 feet shall be backfilled with existing spoil. The excess spoil shall be disposed of by the CONTRACTOR, incidental to other bid items. Care shall be taken when backfilling around the pipe to prevent damage to the trench section surrounded by the geotextile fabric.

When backfilling flexible pipe, the CONTRACTOR shall place and compact bedding material to a point 6 inches above the top of the pipe. Care shall be used not to over-deflect the roundness of the pipe. For flexible pipe, the pipe bedding shall be considered incidental from the center of the pipe to 6 inches over the top of the outside of the pipe.

The remaining trench shall be backfilled in accordance with the specifications for the class of backfill as set forth in Subsection 801-3.6. The areas for each class of backfill specified shall be designated on the plans.

802-3.9 BACKFILL CLASSIFICATIONS. The backfill classifications shall be as defined in Subsection 801-3.6.

802-3.10 PROTECTING UNDERGROUND AND SURFACE STRUCTURES. Temporary support, adequate protection and maintenance of all underground and surface structures, drains, sewers, water mains, service connections for both sewer and

water, and other obstructions encountered in the progress of the work shall be furnished by the CONTRACTOR all at its own expense as approved by the ENGINEER.

(a) Deviations Occasioned by Other Utility Structures. Wherever existing utility structures or branch connections leading to main sewer or water mains or other conduits, ducts, pipes, or structures form obstructions to the grade and alignment of the sewer to be laid, they shall be permanently supported, removed, relocated, or reconstructed by the CONTRACTOR through cooperation with the Owner of the utility, structure, or obstruction involved. In instances where their relocation or reconstruction is impracticable, a deviation from the line and grade will be ordered by the ENGINEER, and the change shall be made in the manner directed by the ENGINEER.
Wherever possible, all existing utility structures or branch connections leading therefrom will be located in advance of the excavation of the trench and properly marked. The CONTRACTOR shall not cut any existing utility lines unless it is determined by the ENGINEER that it is necessary in order to install the new sewer pipes. All utility lines that are cut by the CONTRACTOR with the approval of the ENGINEER shall be repaired or replaced by the CONTRACTOR as Extra Work.
All utility lines that are damaged by the CONTRACTOR shall be repaired or replaced by the CONTRACTOR at the CONTRACTOR's expense.

Wherever the ENGINEER shall determine it is necessary to remove or relocate any existing utility in order to properly install the new sewer pipe, the change shall be made in a manner directed by the ENGINEER and for which extra compensation will be allowed the CONTRACTOR.

(b) Deviation Without Engineer's Consent. No deviation shall be made from the required line and grade established by the ENGINEER without the consent of the ENGINEER.

(c) Subsurface Explorations. Whenever necessary to determine the location of existing pipes, valves, or other underground structures, the CONTRACTOR, after examination of available records and upon written order from the ENGINEER, shall make all explorations and excavations for such purpose for which the ENGINEER may allow extra compensation.

802-3.11 CIRCULAR DEFLECTION TEST. All fittings and plastic or HDPE pipe of 8 inches in diameter or larger shall be tested by the CONTRACTOR to ensure that circular deflections do not exceed the maximum allowable deflection. The CONTRACTOR shall test in accordance with Subsection 801-3.8 "Circular Deflection

Test." Any pipe requiring replacement shall be retested at the expense of the CONTACTOR.

Deflection tests shall be performed a minimum of 30 days after the pipe has been fully backfilled or after gravel section is in place and compacted when pipe is under roadway, and received passing compaction tests per Subsection 801-3.5 Backfilling of Pipe Trench.

802-4 MEASUREMENT AND PAYMENT

802-4.1 thru 4.24 (X)" STORM SEWER PIPE. (X)" Storm Sewer Pipe shall be measured by the linear foot (LF) from centerline of manhole or inlet to centerline of manhole or inlet. If no inlet or manhole is installed, pipe shall be measured to end of pipe section. Flared end sections shall be paid under separate bid item. Items shall be paid for at the unit price for "(Size)" Storm Sewer Pipe" complete, in place, and accepted by the ENGINEER.

802-4.25 thru 4.35 (X)" ARCH STORM SEWER PIPE. (X)" Arch Storm Sewer Pipe shall be measured by the linear foot (LF) from centerline of manhole or inlet to centerline of manhole or inlet and paid for at the unit price bid for "(X)" Arch Storm Sewer Pipe" complete, in place, and accepted by the ENGINEER.

802-4.36 thru 4.50 (X)" CORRUGATED STEEL STORM SEWER PIPE. (X)" Corrugated Steel Storm Sewer Pipe shall be measured by the linear foot (LF) from centerline of manhole or inlet to centerline of manhole or inlet and paid for at the unit price bid for "(Size)" Corrugated Steel Storm Sewer Pipe" complete, in place, and accepted by the ENGINEER.

802-4.51 thru 4.79 (X)" FLARED END SECTION. (X) " Flared End Sections shall be measured on an individual unit basis (EA) and paid for at the unit price bid for "(X)" Flared End Section" complete, in place, and accepted by the ENGINEER.

802-4.80 thru 4.89 (X)"" PERFORATED PIPE. (X)" Perforated Pipe shall be measured by the linear foot (LF) in place and accepted by the ENGINEER. Bends, tees, caps and coupling bands shall be considered incidental to the unit price bid.

802-4.90 BEDDING MATERIAL. Bedding Material shall be measured and paid for under Subsection 801-4.60.

802-4.91 SUBCUT GRAVEL. Subcut Gravel shall be measured and paid for under Subsection 801-4.61.

802-4.92 ROCK EXCAVATION. Rock Excavation shall be measured and paid for under Subsection 801-4.62.

802-4.94 thru 802-4.98 RIPRAP - TYPE ( ). Riprap - Type ( ) shall be measured by the ton and paid for at the unit price bid for “Riprap - Type ( )” complete, in place, and accepted by the ENGINEER.

802-4.99 RIPRAP GROUT. Riprap Grout shall be paid for by the cubic yard (CY) of riprap grout installed and accepted by the ENGINEER. Granular bedding material and installation shall be considered incidental to the price bid for grouted riprap.

802-4.100 SIX” CLEANOUT - IN LINE. Six” Cleanout - In Line shall be paid for by (EA) in place and accepted by the ENGINEER.

802-4.101 SIX” CLEANOUT - END OF RUN. Six” Cleanout - End of Run shall be paid for by each (EA) in place and accepted by the ENGINEER.

802-4.102 DRAINAGE AGGREGATE. Drainage Aggregate shall be paid by the ton for “Drainage Aggregate” in place and accepted by the ENGINEER .

SECTION 900

WATER DISTRIBUTION

SECTION 901 – WATERMAIN

901-1 DESCRIPTION

This item shall consist of watermain pipe and related items of the types, classes, sizes, and dimensions required on the plans, furnished and installed at the places designated on the plans and profiles, or by the ENGINEER in accordance with these specifications and with the lines and grades given.

The bid price per linear foot of pipe in place shall include the cost of excavation and backfill, the cost of furnishing and installing all trench bracing, concrete bases, and concrete thrust blocking, and the material for and the making of all joints, including all connections to existing watermain.

“Unstable,” “Unsuitable,” “Suitable,” and “Unsatisfactory” soil or aggregate items shall be defined as stated in Subsection 202-1.

901-2 MATERIALS

901-2.1 GENERAL. All materials that may come into contact with water intended for use in a public water system shall meet the American National Standards Institute (ANSI) / National Sanitary Foundation International (NSF) Standard 61. A product will be considered as meeting this standard if so certified by NSF, the Underwriters Laboratories, or other organization accredited by ANSI to test and certify such products. The materials shall be of the type selected by the CONTRACTOR and in accordance with the following appropriate requirements unless otherwise specified.

901-2.2 POLYVINYL CHLORIDE PIPE. Polyvinyl chloride pipe (PVC) or molecularly oriented PVC (PVCO) shall meet the requirements of AWWA C900 or C905 or C909, or the latest revision thereof, and shall be furnished in cast iron pipe equivalent outside diameters with elastomeric joints. The pressure class of PVC pipe shall be PC150 with a DR of 18 for pipe smaller than 16 inches, and PC235 with a DR of 18 for pipe 16 inches or larger and for 12 inches or smaller PVCO pipe the pressure class shall be PC150 (AWWA C900 DR18 equivalent).

Where shown on the plans, restrained joint pipe and fittings shall be used. Restrained jointing systems require approval of the ENGINEER. Preapproved restraining systems include Certa-Lok, Yelomine, and EBAA Iron, Inc (MEGALUG). The CONTRACTOR shall note that the standard mechanical joint is not a restrained joint.

901-2.3 DUCTILE IRON PIPE. Ductile iron pipe shall be manufactured in accordance with the requirements of AWWA/ANSI C151/A21.51. Push-on joints and mechanical

joints shall be manufactured in accordance with AWWA/ANSI C111/A21.11. Pipe thickness shall be designated in accordance with AWWA/ANSI C150/A21.50. All pipe under 16 inches shall use pressure Class 350. All 16-inch to 20-inch pipe shall use pressure class 250 or higher. All 24-inch pipe shall be pressure Class 200 or higher. All 30-inch pipe or larger shall be pressure Class 150 or higher. All pipe shall be supplied with a cement mortar lining in accordance with AWWA/ANSI C104/A21.4. All pipe shall have a bituminous exterior coating in accordance with AWWA/ANSI C110/A21.10.

All pipe material suppliers shall be ISO 9001 or 9002 registered or provide the services of an independent inspection agency. Prior to the start of manufacturing, any manufacturer not meeting the ISO registration requirements shall submit to Owner or Owner's engineer the name of an independent inspection agency for approval. The independent inspection agency shall be responsible for sample monitoring of chemical and mechanical tests, and sample visual inspection of quality assurance tests performed on in-process pipe and fittings, and a sample visual and dimensional inspection report from the independent inspection agency of all witnessed tests shall be supplied to Owner or Owner's engineer within 10 days of completion of pipe manufacturing.

Chemical samples shall be taken from each ladle of iron, and the manufacturers' chemical control limits shall be maintained for at least the following elements: carbon, sulfur, phosphorus, silicon, magnesium, chromium, manganese, tin, aluminum, cerium, copper, and lead. When chemical values fall outside the manufacturers' control limits, additional mechanical property tests shall be performed to assure minimum mechanical properties are met.

Where called out on the plans, restrained joint pipe and fittings shall be used. All restrained jointing systems require approval of the ENGINEER. Preapproved restraining systems include Griffin Pipe Product Co. Snap-Lok, US Pipe TR Flex, or American Cast Iron Pipe Co. Flex-Ring. The CONTRACTOR shall note that the standard mechanical joint is not a restrained joint and offers no practical resistance against joint separations.

901-2.4 CAST IRON AND DUCTILE IRON FITTINGS. Cast iron fittings shall be manufactured in accordance with AWWA/ANSI C110/A21.10 and shall be furnished with either Standardized Mechanical Joints or Push-On Joints in accordance with AWWA/ANSI C111/A21.11. Cast iron fittings for sizes up to and including 12 inches shall have a working pressure of 250 pounds per square inch, and fittings larger than 12 inches shall have a working pressure of 150 pounds per square inch, conforming to AWWA/ANSI C110/A21.10. Ductile Iron fittings shall be manufactured in accordance with AWWA/ANSI C153/A21.53 or AWWA/ANSI C110/A21.10. Ductile iron fittings shall have a working pressure of 350 pounds per square inch conforming to AWWA/ANSI C153/A21.53 or AWWA/ANSI C110/A21.10. All Cast iron and ductile iron fittings shall be cement mortar lined and contain an exterior bituminous seal conforming to AWWA/ANSI C104/A21.4. All cast iron and ductile iron fittings shall be considered incidental to the price bid for watermain.

901-2.5 GATE VALVE. The gate valve furnished shall be manufactured by American Flow Control or American AVK Company or approved equivalent, under the minimum requirements in design, material, and workmanship conforming to the latest AWWA Standard C515. The metals used shall be in accordance with AWWA and ASTM Standards. Unless otherwise designated, all gate valves shall have a non-rising stem, O-ring stem seals, 2-inch operating nuts, and open counterclockwise. If a stem extension is specified, it shall be fastened to the operating nut with a set screw. The operating nut shall be drilled or otherwise indented to accept the set screw and provide a secure connection that will prevent an extension from coming loose during operation. The gate valve shall have a resilient synthetic rubber coating seat attached to the wedge, manufactured and designed in accordance with the latest AWWA Standard C515. Resilient-seated gate valve body and bonnet shall be coated, inside and out, with a fusion bonded epoxy in accordance with AWWA C550. The waterway shall have a full unobstructed flow without recesses in the bottom. All bonnet bolts shall be stainless steel.

All valves shall be placed on a minimum 6” thick pad of sufficient dimensions for valve size.

901-2.7 VALVE BOXES. The valve boxes furnished shall be manufactured by Tyler Pipe Model 6860 or Star Pipe Products Cast Iron Heavy Duty Model "G" or approved equivalent, with bases and dimensions of each section to be as follows:

No. 6 round base for 16-inch and smaller gate valves.
No. 160 oval base for 24-inch or larger.
No. 6 round base for all butterfly valves.
Covers marked "Water."
Top Section 25½ inches long.
Extension pieces as required.

Valve box debris plugs as manufactured by Infact Corporation or approved equivalent shall be furnished and installed into new valve boxes.

All valve boxes shall be capable of a minimum 6 inch top adjustment in either direction, up or down, to or from, the finished curb grades shown in the plans.

Valve box debris plugs and valve box extension pieces required to make the above-mentioned adjustment shall be considered incidental to the price bid for “Gate Valve and Box.”

901-2.8 GATE VALVE ADAPTOR. Gate valve adaptor shall be as manufactured by Adaptor, Inc. or approved equivalent. The adaptor shall be ¼-inch steel with a UV protective coating and a ¾-inch gasket attached to the adaptor. The adaptor shall be considered incidental to the price bid for “Gate Valve and Box”.

901-2.9 HYDRANTS. Hydrants shall be manufactured in accordance with the requirements of AWWA C502. The hydrants shall be equipped with break-a-way type traffic flanges and two 2½-inch hose connections with National Standard Threads and one (1) 4½ -inch pumper connection with National Standard Threads. All 6-inch and 8-inch hydrants shall be 5¼-inch Waterous Pacer Model WB-67-250 as manufactured by American Flow Control or 5¼-inch American Darling Model B-62-B as manufactured by American Flow Control, or approved equivalent. New fire hydrants shall have a minimum of 24 inches between the 2½-inch hose connection and the nominal ground line groove and have a bury depth of 8½ feet unless otherwise called for in place. All metal internal moving parts below ground will be brass, Class 304 or 316 stainless steel, or have an epoxy coating as such to prevent corrosion for the life of the fire hydrant. All washers and barrel bolts below ground level shall be stainless steel. The hydrant lower rod shall be Class 304 or 316 stainless steel or have an epoxy coating as such to prevent corrosion for the life of the fire hydrant. The hydrants shall be surrounded by ½ cubic yards of subcut gravel so placed that it will readily take up all water from the drip valves. The hydrants shall be set on a concrete pad 6 inches thick and 18 inches square.

All fire hydrant leads will have a gate valve installed on the lead. The valve shall be restrained to the tee with a city-approved method. For those fire hydrant leads 4 feet or less, a special fitting such as a Foster Adapter will be acceptable. No valve shall be installed closer than 2 feet from the fire hydrant.

Fire hydrants shall be installed with a 48-inch Red FH800 American Series Fire Hydrant Marker manufactured by Flexstake, Inc. of Fort Myers, Florida, or an equivalent approved by the ENGINEER. All costs to furnish and install marker shall be incidental to hydrant.

901-2.10 RESET HYDRANT. Hydrants to be reset shall be either furnished by the CITY OF BISMARCK or an existing hydrant salvaged during construction. Hydrants shall be set at the location shown on the plans. Care shall be taken by the CONTRACTOR not to damage existing watermain, connections, or valves while removing existing hydrants. Care shall also be taken not to damage the hydrant to be reset during transportation or storage by the CONTRACTOR.

The depth of earth cover over the connecting pipe shall be no less than 8 feet. The hydrants shall be surrounded by ½ cubic yards of subcut gravel so placed that it will readily take up all water from the drip valves. The hydrants shall be set on a concrete pad 6 inches thick and 18 inches square.

Reset fire hydrants shall be installed with a 48-inch Red FH800 American Series Fire Hydrant Marker manufactured by Flexstake, Inc. of Fort Myers, Florida, or an equivalent approved by the ENGINEER. All costs to furnish and install marker shall be included with the cost to reset the hydrant.

901-2.11 TAPPING SLEEVE WITH TAPPING VALVE. For pipe sizes of 6 inches to 24 inches, the tapping sleeve shall be stainless steel with a stainless steel flange and

bolts and shall conform to the “Smith Blair” Type 663 or “Romac” Type SST or approved equivalent. For pipe sizes of 24 inches or larger, the tapping sleeve shall be epoxy-lined and coated with stainless steel bolts and shall conform to the “Smith Blair” Type 622 Split Sleeve with O-Ring Seal. The tapping valve shall conform to City of Bismarck Standard Specification 901-2.5 for Gate Valves. Tapping saddles shall be installed according to manufacturer’s installation instructions. The tapping saddle bolts shall be torqued using a calibrated torque wrench with a handle at least 12 inches in length. The CONTRACTOR should be prepared to show certification of torque wrench calibration at the request of the ENGINEER.

Tapping saddles with valves shall be hydrostatically pressure tested on the main prior to requesting a tap. The test shall be minimum 125 pounds per square inch for a duration of 30 minutes.

The City of Bismarck Public Works Department will tap the watermain at a charge to the CONTRACTOR. The CONTRACTOR shall be responsible for all other work connected with installation of the tapping sleeve and valve, including the necessary space around the watermain required for the tapping machine and assisting the Public Works Department in positioning the tapping machine.

901-2.12 CONCRETE. Concrete for pipe cradles, anchors, and thrust blocking shall conform to the requirements of Section 501.

901-2.13 BEDDING MATERIAL. The bedding material shall be defined as stated in Subsection 801-2.

901-2.14 SUBCUT GRAVEL. The subcut gravel shall be as defined in Subsection 801-2..

901-2.15 SALVAGE MATERIAL. All existing pipe, gate valves, fittings, etc., removed during construction, when requested by the ENGINEER, shall be salvaged and delivered to the City of Bismarck Water Department as directed. No extra compensation will be allowed for this work.

901-2.16 MARKING TAPE. The CONTRACTOR will be required to furnish and install marking tape located 2 feet above the top of all watermain installed under the contract. The tape shall be of the non-detectable type and shall have a minimum width of 5 inches. The tape shall be blue in color with the words "CAUTION WATER LINE BELOW" imprinted on the tape in black capital letters. The marking tape shall be equal to that manufactured by Presco standard grade.

Cost of marking tape and installation shall be considered incidental to other items.

901-2.17 POLYETHYLENE ENCASEMENTS. All ductile iron and cast iron pipe, valves, valve boxes, fittings, couplers, and hydrants shall be encased with 8-mil linear low-density (LLD) polyethylene film in accordance with ANSI/AWWA C105/A21.5. All encasements shall be considered incidental. Care shall be taken so as not to damage

epoxy coating or painted surfaces, damaged pipe and fittings shall be replaced at the expense of the CONTRACTOR.

901-2.18 MECHANICAL JOINT BOLT REQUIREMENTS. Bolts for mechanical joint fittings, valves, and hydrants shall be alternated with one-half stainless steel and one-half low alloy steel. All stainless steel bolts shall be Grade 304.

901-2.19 INSULATION BOARDS. The insulation shall have a thermal conductivity of not more than 0.28 BTU per hour per square foot per degree Fahrenheit per inch of thickness as tested in accordance with ASTM C177. The insulation shall not absorb moisture to an extent greater than 2.5 percent by volume as tested in accordance with ASTM D2127. The compression strength of the insulation shall be greater than 20 psi as tested in accordance with ASTM D1621. The minimum density of the insulation shall be 1.3 pounds per cubic feet as tested in accordance with ASTM D1622. The insulation shall be specifically designed for protection of underground utilities.

901-2.20 POLYETHYLENE PLASTIC PIPE. Polyethylene plastic pipe shall be AWWA C906 high-density polyethylene and shall meet the requirements of ASTM F714 Polyethylene (PE) Plastic Pipe (SDR-PR), based on the outside diameter, ASTM D1248, and ASTM 3350. All pipes shall be made of virgin material. No rework except that obtained from the manufacturer of the same formulation shall be used. The pipe shall be homogeneous throughout and be free of faults such as visible cracks, holes, foreign material, and blisters. The minimum wall thickness of the high-density polyethylene pipe shall meet the minimum requirements of SDR 11 pipe with ductile iron pipe outside diameters.

901-3 CONSTRUCTION REQUIREMENTS

901-3.1 EQUIPMENT. All equipment necessary and required for the proper construction of watermain shall be on the project, in first-class working condition, and approved by the ENGINEER before construction is permitted to start.

The CONTRACTOR shall provide appropriate hoisting equipment to handle the pipe while unloading and placing it in its final position without damage to the pipe.

The CONTRACTOR shall provide methods and means to obtain the required compaction of the pipe bed and the backfill, as specified.

901-3.2 EXCAVATION AND PREPARATION OF TRENCH. Excavation and preparation of the trench for watermain construction shall conform to Subsection 801-3.2 with the following additions:

The CONTRACTOR shall notify the City of Bismarck Fire Department of any loss of service of a fire hydrant or ability to use a fire hydrant 1 day before the occurrence. The CONTRACTOR shall also notify the City of Bismarck Fire Department when each hydrant is back in service. Any existing hydrants and valve boxes to be removed and not replaced shall be cut off 2 feet below the surface, and the void shall be filled with

granular material, up to 2 feet below the surface. All hydrant heads shall be salvaged and delivered to the City of Bismarck Public Works Department at 601 South 26th Street.

Existing gate valves shall only be operated by City of Bismarck representatives. The CONTRACTOR will operate its newly installed valves until the project is accepted. Existing valves may not close tight enough to get a watertight closure. The CONTRACTOR may have to do work without a total water shut off with no extra charge to the City of Bismarck. In the event extra valves have to be shut down to slow the flow of water, there shall be no extra charge to the City of Bismarck by the CONTRACTOR for the time, up to 2 hours, to accomplish the water shutdown.

901-3.3 ROCK EXCAVATION. The rock excavation shall be as defined in Subsection 801-3.3.

901-3.4 PIPE LAYING. All pipe laying shall conform to Subsection 801-3.4 with the following additions:

Before lowering and while suspended, shall be inspected for defects. Any defective, damaged, or unsound pipe shall be rejected. All foreign matter or dirt shall be removed from the inside of the pipe before it is lowered into its position in the trench, and it shall be kept clean by approved means during and after laying. Care shall be taken to prevent dirt from entering the joint space. At times when pipe laying is not in progress, the open ends of the pipe shall be closed by approved means, and no trench water shall be permitted to enter the pipe.

Cutting pipe for inserting valves, fittings, or closure pieces shall be done in a neat and workmanlike manner without damage to the pipe. Unless otherwise directed, pipe shall be laid with the bell ends facing the direction of laying. For lines on an appreciable slope, bells shall face upgrade, if directed by the ENGINEER. Whenever necessary to deflect the pipe from straight line, whether in the vertical or horizontal plane to avoid obstructions, to plumb stems, or other reasons, the degree of deflection shall not exceed manufacturer's recommendations and shall be approved by the ENGINEER. When any railroad is crossed, all precautionary construction measures required by the railroad officials shall be followed. No pipe shall be laid in water or when the trench condition or the weather is unsuitable for such work except by permission of the ENGINEER.

The CONTRACTOR shall place a 16-inch by 16-inch or larger concrete block, as directed by the ENGINEER, under all valves. A larger block will be required for larger valves. The block shall be considered incidental to the price bid for the valve.

When installing watermain larger than 12 inches, on either side of each fitting, 3 bell joint sections, with a minimum of 2 uncut sections of pipe, shall be installed with restrained joints.

Restrained joint systems require approval by the ENGINEER. Preapproved restraining systems include Certa-Lok, Yellowmine, and EBAA Iron, Inc. (Megalug). The CONTRACTOR shall note that the standard mechanical joint is not a restrained joint and offers no practical resistance against joint separations. Restraining systems shall be incidental to watermain.

All bolted fittings and service saddles shall be installed according to the manufacturer's recommendations. All bolts shall be tightened with a torque wrench according to the manufacturer's recommendations. The CONTRACTOR shall have a copy of the installation guide on site.

The CONTRACTOR shall furnish and install temporary watertight plugs in any opening left in the main line or lead off the main line, during construction, which would allow water or other debris to enter the newly constructed pipe or any existing pipe.

901-3.5 TESTS. Inspection and tests must be made by the manufacturer on all pipe and component parts before shipment. Such tests shall be made by a testing laboratory satisfactory to the ENGINEER, and such tests shall be made in accordance with the requirements of the American Society for Testing Materials. Documentary evidence that the materials have been passed such inspection and tests must be furnished to the ENGINEER before the delivery of the materials on the job. Any materials which do not prove satisfactory after being placed must be removed from the premises and replaced with satisfactory material. The cost of foundry inspection shall be paid for by the CONTRACTOR. After the pipe has been laid, all new pipe, including pipe for water services or any valve section thereof, shall be subject to a hydrostatic pressure test under the supervision of the ENGINEER. The test section shall be filled with water, and the pressure shall be gradually increased. If defects are found, the CONTRACTOR shall immediately make the necessary repairs at its own expense. The final pressure test shall be 150 pounds per square inch and shall be held at least 2 hours. The CONTRACTOR shall furnish all tools, equipment, and material necessary to perform the pressure test. The CITY OF BISMARCK will provide the water for filling the pipe.

901-3.6 DISINFECTION AND BACTERIOLOGICAL TESTING. After the new mains, replacement mains, and valved extensions have been tested, they shall be flushed until all foreign material has been removed. Chlorination applications shall be made under supervision of the ENGINEER in accordance with AWWA C651. Water shall be fed into the new line with chlorine applied in amounts to maintain a chlorine residual of 50 milligrams per liter for 24 hours or chlorine residual of 200 milligrams per liter for three (3) hours. All valves and hydrants in the section treated shall be operated during this time in order to disinfect the appurtenance. Heavily chlorinated water should not remain in prolonged contact (maximum of 48 hours) with the watermain pipe. The chlorine shall be flushed from the main through hydrants and taps until all excess chlorine has been removed. The CONTRACTOR shall be responsible for repairing all grass, new or existing, damaged by the chlorination and flushing process. No chlorination water will be permitted in the watermain trench. The CONTRACTOR shall furnish all tools, equipment, materials, and chlorine to complete the chlorination process, incidental to other bid items. Prior to discharging chlorinated water into any drainage way, the

CONTRACTOR shall obtain the permission of the ENGINEER. Taps are to be provided so at least one (1) set of samples may be collected from every 1,200 feet of the new watermain, with one (1) set from the end of the line and at least one (1) set from each branch exceeding 50 feet in length.

After final flushing each 1,200-foot segment and branches greater than 50 linear feet, and before the new watermain is connected to the distribution system, two (2) consecutive sets of acceptable samples, per 1,200-foot main or 50-foot branch, taken at least 24 hours apart, shall be collected from the new main. The CONTRACTOR or testing laboratory, in the presence of the ENGINEER, shall perform the sampling. The CONTRACTOR shall record the locations, by street and station and date, the samples were. Sampling shall be performed with due care to prevent contamination using sterile bottles provided by the testing laboratory. It is not recommended that samples be collected from hoses or fire hydrants. The testing of the samples shall be performed by a State of North Dakota certified testing laboratory selected by the CONTRACTOR. All samples shall be tested for bacteriological quality and shall show the absence of coliform organisms. All super chlorinated water from the disinfection of a potable distribution system shall not reach waters of the state until the total residual chlorine level has become non-detectable. Any sample result less than 0.05 mg/l will be considered “non-detectable.”

Written records of all test results shall be supplied to the ENGINEER and the CONTRACTOR by the testing laboratory as soon as possible. If trench water has entered the new main during construction or if, in the opinion of the ENGINEER, excessive quantities of dirt or debris have entered the new main, bacteriological samples shall be taken at intervals of approximately 200 feet and shall be identified by location. Samples shall be taken of water that has stood in the new main for at least 16 hours after final flushing has been completed.

The testing laboratory shall test for coliforms and e-coli using the "Colilert" or other ENGINEER approved equivalent test. The "Colilert" test is a pass/fail test that does not quantify the amount of bacteria. Any presence of coliforms or e-coli shall qualify as a failed test.

If the initial disinfection fails to produce satisfactory bacteriological results, the new main may be reflushed and shall be resampled. If check samples also fail to produce acceptable results, the main shall be rechlorinated by the continuous-feed or slug methods of chlorination until satisfactory results are obtained.

Bacteriological samples shall be taken after repairs or short connection pieces are completed to provide a record for determining the procedure's effectiveness. If the direction of flow is unknown, the samples shall be taken on each side of the repair or connection. If positive bacteriological samples are recorded, then the situation shall be evaluated to determine corrective action, and daily sampling shall be continued until 2 consecutive negative samples are recorded.

All disinfection and bacteriological testing shall be incidental to other items.

901-3.7 HANDLING PIPE AND ACCESSORIES. Pipe, fittings, valves, hydrants, and other accessories shall, unless otherwise directed, be unloaded at the point of delivery, and hauled to and distributed at the site of the project by the CONTRACTOR. They shall at all times be handled with care to avoid damage. In loading and unloading, they shall be lifted by hoists or slid or rolled on skidways in such a manner as to avoid shock. Under no circumstances shall they be dropped. Pipe handled on skidways must not be skidded or rolled against pipe already on the ground. In distributing the material at the site of the work, each piece shall be unloaded opposite or near the place where it is to be laid in the trench. Pipe shall be handled in such a manner that a minimum of damage to the coating will result. Damaged coating shall be repaired in a manner satisfactory to the ENGINEER. Pipe shall be placed on the site of work parallel with the trench alignment and with bell ends facing the direction in which the work will proceed unless otherwise directed. The interior of all pipe fittings and other accessories shall be kept free from dirt and foreign matter at all times. Valves and hydrants, before installation, shall be drained and stored in a manner that will protect them from damage by freezing.

901-3.8 BACKFILLING OF PIPE TRENCH. Excavation and preparation of the trench for watermain construction shall conform to Subsection 801-3.5 with the following revision:

After the pipe has been laid to line and grade, the trench shall be backfilled under and along the sides of the pipe up to 2 inches over the top of the pipe by thoroughly compacting bedding material into place so as to form a uniform bed for the pipe. See Standard Detail 900-3.

901-3.9 BACKFILL CLASSIFICATIONS. The backfill classifications shall be as defined in Subsection 801-3.6.

901-3.10 PROTECTING UNDERGROUND AND SURFACE STRUCTURES. Protection shall conform to Subsection 801-3.8.

901-3.11A BLOCKING HYDRANTS AND FITTINGS. All hydrants, tees, and bends 22½ degrees and larger, and tapping saddles 3 inches and larger, shall be provided with suitable reaction blocking of concrete blocks of adequate size or poured in place concrete to prevent movement of fittings and hydrants when the pipe is under pressure. Precast concrete blocks shall be allowed for pipe sizes 12 inches and smaller. Thrust blocks for pipe sizes larger than 12 inches shall be poured in place. The blocks shall be placed in a manner acceptable to the ENGINEER and shall allow pipe and fitting joints to be accessible for repair. The concrete blocks may be poured in place if sufficient time is allowed for curing.

901-3.11B HYDRANT EXTENSIONS. Hydrant extensions, as needed per plans, shall be furnished and installed by CONTRACTOR. Extensions shall be considered incidental to the price gid for “X” Hydrant”.

901-3.12 GATE VALVE ADAPTORS. All gate valve boxes shall be installed upon the valve with the use of a gate valve adaptor. The adaptor shall be considered incidental to the price bid for “Gate Valve and Box”.

901-3.13 MARKING VALVE BOX LOCATIONS. The CONTRACTOR will be required to furnish and install a steel fence post by each valve box unless directed not to by the ENGINEER. Steel fence posts to be used for valve locations shall be a "Tee" or "U" post having a minimum length of 5½ feet. The post shall be located within 2 feet from the valve box in a direction toward the street.

The cost of the steel fence post and the installation shall be considered incidental to other bid items.

901-3.14 INSULATE WATERMAIN. The CONTRACTOR shall furnish and install the insulation required to insulate the watermain as shown on the plans. The insulation shall be at least 4 inches thick by 8 feet wide centered on the watermain. The material between the top of the watermain bedding and the insulation shall consist of a concrete sand.

901-3.15 TEMPORARY WATER SUPPLY. If the CONTRACTOR elects to use a temporary water supply, the CONTRACTOR must provide a continuous water supply to the affected properties. The CONTRACTOR must use a polyethylene or PVC pipe. Rubberized garden hoses may not be used. The method and type of material shall be approved by the ENGINEER prior to setting up the temporary water supply. Any damage that may occur from the temporary water supply shall be the responsibility of the CONTRACTOR. All materials, labor, and equipment necessary to provide the temporary water supply shall be considered incidental to other bid items.

901-3.16 ABANDONED WATERMAIN. The CONTRACTOR shall plug all exposed ends of the watermain to be abandoned with concrete and remove all existing valve boxes and hydrant heads on the abandoned line, incidental to other bid items. CONTRACTOR shall confirm all existing valves to be abandoned are closed prior to removal of the box.

901-4 MEASUREMENT AND PAYMENT

901-4.10 thru 4.25 (X)” WATERMAIN. (X) inch watermain shall conform to Subsections 901-2.2 and 901-2.3. The watermain pipe shall be measured by the linear foot (LF) through fittings and from centerline of pipe to centerline of pipe as shown in Standard Detail 900-2 and shall be paid for at the unit price bid for "Watermain" complete, in place, and accepted by the ENGINEER.

901-4.50 thru 4.69 (X)” GATE VALVE AND BOX. (X)” Gate Valve and Box shall be measured on an individual unit basis (EA) and shall be paid for at the unit price bid for "(X)” Gate Valve and Box" complete, in place, and accepted by the ENGINEER.

901-4.70 6” HYDRANT. 6” Hydrant shall be measured on an individual basis (EA) and paid for at the unit price bid for "Six” Hydrant" complete, in place, and accepted by the ENGINEER.

901-4.71 8” HYDRANT. 8” Hydrant shall be measured on an individual unit basis (EA) and paid for at the unit price bid for "Eight-Hydrant" complete, in place, and accepted by the ENGINEER.

901-4.72 CAST IRON AND DUCTILE IRON FITTINGS. Cast Iron and Ductile Iron Fittings shall be considered incidental to the price bid for “(X)” Watermain.”

901-4.73 AIR RELEASE VALVE AND MANHOLES. Air Release Valve and Manholes shall be measured and paid for under Subsection 1205-4.4.

901-4.74 BEDDING MATERIAL. Bedding Material shall be measured and paid for under Subsection 801-4.60.

901-4.75 SUBCUT GRAVEL. Subcut Gravel shall be measured and paid for under Subsection 801-4.61.

901-4.76 ROCK EXCAVATION. Rock Excavation shall be measured and paid for under Subsection 801-4.62.

901-4.77 RESET HYDRANT. Reset Hydrant shall be measured on an individual basis (EA) and paid for at the unit price bid for "Reset Hydrant" complete, in place, and accepted by the ENGINEER.

901-4.78 INSULATE WATERMAIN. Insulate Watermain shall be measured by the linear foot (LF) of watermain to be insulated and paid for at the unit price bid for "Insulate Watermain" complete, in place, and accepted by the ENGINEER.

901-4.79 thru 4.99 (SIZE) TAPPING SLEEVE WITH (SIZE) TAPPING VALVE AND BOX. (Size) Tapping Sleeve with (Size) Tapping Valve and Box shall be measured on an individual basis (EA) and paid for at the unit bid price for “(Size) Tapping Sleeve with (Size) Tapping Valve and Box” complete, in place, and accepted by the ENGINEER.

SECTION 1000

ELECTRICAL

SECTION 1001 – ROADWAY STREET LIGHT CONSTRUCTION

1001-1 DESCRIPTION

This work shall consist of the construction of street lights and related items in accordance with these specifications and standard details at the locations and to the lines and grades shown on the plans or as directed by the ENGINEER.

1001-2 MATERIALS

1001-2.1 GENERAL. Materials to be furnished by the CONTRACTOR shall be all materials required to install roadway street lighting in place as shown on the plans complete and ready for operation.

All materials and equipment furnished shall be new and shall be approved by the Underwriter's Laboratories, Inc. as conforming to its standards in every case where such a standard has been established for the particular item in question.

It is the intent of the plans and specifications to comply in every respect to the requirements set forth by the National Electric Code, the North Dakota State Electrical Board, the local utility company, and the ordinances established by the CITY, and it shall be the responsibility of the CONTRACTOR to ensure that the above requirements are met in every respect. All electrical work shall be done under the supervision of a master electrician.

Should any requirement of the above not be complied with by the plans or the specifications either through omission of equipment, material, and method of installation, or by specification of material, equipment, or installation methods, the CONTRACTOR shall immediately notify the ENGINEER.

All approved substitute items will be clearly identified in an addendum which will be sent to all bidders well in advance of opening of bids. Only those items on the drawings and specifications and those items approved prior to bidding shall be furnished and installed on this project. Where substitute items are used, the CONTRACTOR shall assume all responsibility for physical dimensions and pay for all changes resulting from substitutions. This responsibility shall also include all extra work necessitated by other trades as a result of the substitutions.

The CONTRACTOR shall submit shop drawings or product data, in accordance with Section 100, covering the following items at a minimum:

1. Feed point enclosures, relays, switches, panels, and photo cells.

2. Cable.
3. Conduit.
4. Light standard poles, each type.
5. Luminaires, each type.
6. Junction boxes.
7. Splice connectors.

Drawings or product data shall be marked as to item designation and submitted within 30 days after contract awards. No equipment shall be ordered until drawings and product data have been approved by the ENGINEER.

The CITY reserves the right to order additional light standards and/or luminaires along with the CONTRACTOR's shipment for the specific project for the following types of light units: B, B1, BR, C, C1, D1, and D2, as detailed in these specifications. Materials are to be billed to the CITY at the CONTRACTOR's invoice cost plus 15 percent. The CITY will be responsible for unloading and storing additional materials ordered by the CITY. The CONTRACTOR shall contact the CITY, by letter, prior to placing the CONTRACTOR's order for light standards and luminaires. The CITY shall state quantities of additional materials, per item desired, in a letter addressed to the CONTRACTOR.

The CONTRACTOR shall keep one set of plans with him at all times to red line locations of conduits not requested by the CITY, but installed by the CONTRACTOR for his convenience. In addition, the red lined drawings shall contain relocation of light standards, feed points, and changes in the cable location. This red lined plan set shall be turned over to the CITY prior to the close of the project.

The CONTRACTOR shall be responsible for locating and marking all underground circuits associated with the project throughout the course of the project. The CONTRACTOR shall be relieved of this responsibility at such point in the project when the lights are fully operational and a set of red lined drawings has been submitted and approved by the ENGINEER. The cost for all locating and marking shall be incidental to the cost of other items.

1001-2.2 UNDERGROUND CABLE AND CONDUCTORS. Underground circuit conductors shall be stranded copper, Type “RHH/RHW” or "USE" conductors, insulated for direct burial and rated 600 volts. Conductor sheath shall be marked as to voltage, AWG, Type (RHH/RHW-USE), and manufacturer. The conductor sheath shall be color coded to indicate red-power, blue-power, and white-neutral.

Underground ground conductor shall be No. 6 stranded bare copper or Type TW insulated copper ground conductor.

Service conductors from electric utility service point shall be Type RHW-USE, sized as per utility company requirements and electrical loading.

1001-2.3 CONDUITS. Conduits shall be 2-inch steel rigid galvanized conduit when jacked in place with bushings at each end. When pulled into place or direct buried, conduits shall be 2-inch polyvinyl chloride (PVC) Schedule 40, UL listed for electrical usage and sunlight resistant. Bell-type fittings shall be placed at both ends.

1001-2.4 MARKER TAPE. Marker tape shall be 6-inch wide red plastic tape marked "Caution - Buried Electric Cable."

1001-2.5 JUNCTION BOXES. Junction boxes shall be made of a lightweight, high-density, polymer concrete composite, UL listed with knockouts for cable entrance. The box shall comply with ANSI/SCTE 77 with a design load of 22,500 pounds, a test load of 33,750 pounds, and meet ANSI Tier 22 test provisions. The cover shall meet an 8,000-pound design load and 12,000-pound test load. Boxes shall be resistant to sunlight exposure, weathering, chemicals, and unaffected by freeze-thaw cycles to -50°F. Minimum dimensions shall be 24-inch by 13-inch by 18-inch D with stackable boxes or extensions allowed to achieve required depth when approved by the ENGINEER. Box covers shall have stainless steel hex bolts and be stamped with standard logo "Street Lighting."

Box manufacturer shall be Quazite, Model PG, Oldcastle Precast, Inc., Model Synertech Heavy-Duty, or approved equivalent.

1001-2.6 SPLICE CONNECTORS. Splice connectors at junction boxes for multiple connections shall be Homac, Type RAB-X-URD-BUSS submersible insulated subsurface terminal for copper conductor, or approved equivalent.

Splice connectors at pole hand hole shall be Penn-Union PBNA2/0X, or approved equivalent.

1001-2.7 FEED POINT ENCLOSURE

(a) Pad-mounted feed point enclosure shall be made of minimum 1/8-inch aluminum, with a brushed aluminum finish, rated for NEMA 3R and be ETL or UL listed in accordance with UL 50. Dimensions of the enclosure shall be 42-inch wide by 12-inch depth by 51-inch height and shall have a domed roof with a NEMA 3R drip shield and two doors. The doors shall have an aluminum continuous piano-style hinge, a neoprene gasket, and a stainless steel 3-point latch capable of being padlocked. The enclosure shall be equipped with back panel rails such that equipment may be mounted in the cabinet with no penetrations to the exterior of the cabinet. The back panel shall be galvanized steel. All hardware shall be non-corrosive.

The enclosure shall be manufactured by Povolny Specialties, or approved equivalent.

(b) Pole-mounted feed point enclosure shall be made of minimum 1/8-inch aluminum, with a brushed aluminum finish, rated for NEMA 3R and be ETL or UL listed in accordance with UL 50. Dimensions of the enclosure shall be 30-inch wide by 8-inch depth by 36-inch height, with an exterior mounting plate and a single door. The door

shall have a minimum of three lift off hinges, a neoprene gasket, and a stainless steel 3-point latch capable of being padlocked. The enclosure shall be equipped with back panel rails such that equipment may be mounted in the cabinet with no penetrations to exterior of the cabinet. The back panel shall be galvanized steel. All hardware shall be non-corrosive.

The enclosure shall be manufactured by Povolny Specialties, Hoffman, or approved equivalent.

1001-2.8 RELAYS, PANELS, SWITCHES, PHOTO CELL

(a) Relays shall be RCOC Type MR-UD No. 6342 with normally open contacts.

(b) Electric panel shall be single-phase load center with enclosure rated NEMA 1 with minimum 12 spaces/24 circuits, rated 120/240 volt, 100-amp two-pole main breaker, copper bus, and a minimum 22,000-amp IR. The load center shall be Square D, Model QO120M100, or approved equivalent.

(c) A single pole test switch shall be provided to test the lights. The switch shall be mounted on a metal box with raised switch cover. Utilizing laminate engraved nameplate(s), the switch options shall be marked as “Test” and “Auto” with two (2) 1/2-inch by 1½-inch nameplate. Marker as a means of labeling will not be acceptable.

(d) Photo cell for control of relays shall be Hubbell PBT-1, or approved equivalent.

1001-2.9 STREET LIGHT STANDARDS

(a) Type B, B1 Standards shall be prestressed spun concrete of natural polished finish the precast type as manufactured by Ameron MEO-8.5-C6 Brace - No. 112 - sky gray, natural polished finish, Stresscrete E330-BPO-G-S30-AG-C/W Brace No. KA31-S-Clamp-Salt & Pepper natural polished finish or approved equivalent to provide a minimum mounting height of 28 feet. Poles shall be complete with hand holes and metal covers secured in place with screws. Concrete light standards shall be equipped with a grounding lead to bond the pole to the grounding system.

(b) Type BR standards shall be prestressed spun concrete of the precast type. Poles shall be Ameron SEO-4 (direct-embedded octagonal) with a 2 7/8-inch o.d. cast aluminum top tenon to provide a minimum mounting height of 13 feet. Color shall be No. 112 - sky gray, natural polished finish. Poles shall be complete with hand hole access and covers secured in place with screws. Concrete light standards shall be equipped with a grounding lead to bond the pole to the grounding system.

(c) Steel light standards (C, C1) shall be steel, galvanized type, as manufactured by Millerbernd RLDA6-400ND, Valmont Industries, Inc. DS90 or approved equivalent, of one- or two-piece construction. Galvanizing shall be in accordance with ASTM A123. The shaft shall have only one longitudinal weld and shall have a minimum yield strength of 50,000 psi.

The Davit-type mast arm shall be constructed of the same material and by same the method as the shaft. Mast arm shall have a tenon adaptor for luminaire mounting.

The anchor shall be a one-piece steel casting secured to the lower end of the shaft by two continuous welds. One weld shall be inside the base at the bottom of the shaft and the other shall be on the outside of the shaft at the top of the anchor base. The welded connection shall develop the full strength of the adjacent shaft section. The anchor base shall be complete with bolts, washers, shims, and bolt covers with cap screws for attaching covers to base. The grounding lug shall be provided inside of the hand hole.

(d) Type D1 and D2 Standards shall be prestressed spun concrete with a black exposed aggregate finish with a gloss acrylic coating (6P3A) as manufactured by Ameron MEO-6 to provide a minimum mounting height of 19 1/2 feet. Poles shall be complete with hand holes and covers, painted to match pole color, and secured in place with screws. Concrete light standards shall be equipped with a grounding lead used to bond the pole to the grounding system.

A hand hole shall be provided in the shaft opposite the roadside of the pole for all pole types unless otherwise noted in the Plans. Hand holes shall be a minimum of 4 inches by 6 inches with reinforced frame and removable metal cover, and the cover shall be secured in place with screws.

1001-2.10 LUMINAIRES, LAMPS, BALLAST, POST WIRING WITH FUSE

(a) Luminaires for Types B/B1 or C/C1 shall be totally enclosed with integral high-pressure sodium. Luminaires shall consist of head with ballast, socket, and optical assembly.

Heads shall have a die-cast aluminum housing. The housing shall have a drop down power door with no photocell receptacle and be designed for internal wiring and an internal 4-bolt 2-inch slip fitter adjustable plus or minus 5 degrees (±5°) from horizontal.

An anodized aluminum reflector with a drop glass prismatic refractor shall provide a uniform distribution, IES Type III, medium, semi cutoff distribution unless otherwise noted in the plans or specifications. Photometric data shall be provided.

Ballasts shall be a constant wattage autotransformer or peak lead autotransformer with multiple voltage taps and suitable for cold weather starting at an ambient temperature of -20°F. Data listing starting and normal operating currents shall be provided. Luminaires shall have an encapsulated starter.

Lamps shall supply the following:

150 watt - 13,800 Lumens, Mean
250 watt - 25,000 Lumens, Mean
400 watt - 45,000 Lumens, Mean

Type B luminaires shall be as follows: American Electric Lighting, Model 315-15S-CA-MT1-R3DG-4B-ULNREC, General Electric, Model MDRA-155-0-A1-2-R-MS3-2U, or approved equivalent.

Type B1 and Type C luminaires shall be as follows: American Electric Lighting, Model 325-25S-CA-MT1-R3DG-ULNREC, General Electric, Model MDRA-25S-0-A-1-R-MS3-2U, or approved equivalent.

Type C1 luminaires shall be as follows: American Electric Lighting, Model 325-40S-CA-MT1-R3DG-ULNREC, General Electric, Model MDRA-40S-0-A-1-R-MS3-2U, or approved equivalent.

All Luminaires, by type specified, shall be by one manufacturer similar and equal.

(b) Luminaires for Type BR lights shall be Holophane PTU-15AHP-MA-B-G3-B series post-top units, non-photocell type with multiple voltage/high power factor ballasts, 150-watt and IES Type III medium, semi cutoff distribution glass refractor. Luminaires shall be equipped with integral slip fitter for 3-inch O.D. tenon mount.

(c) Luminaires for the Type D1 lights shall be Holophane ST-15AHP-MA-B3B series post-top units complete with ornate trim including spike finial, bands, ribs, and medallions, black in color. Luminaires shall be non-photocell type with high power factor ballasts, 150-watt, and IES Type III medium, semi cutoff distribution glass refractor. Luminaires shall be equipped with integral slip fitter for 3-inch O.D. tenon mount.

(d) Luminaires for Type D2 lights shall be Whatley Lighting, Model 1542TR-150HPS-MT-HR3-BLK with a Type PT01 mounting arm. The luminaire shall be non-photocell type with high-power factor ballast (multi-tap wired for 120V), 150W HPS, IES Type III optics, and sandblasted-tempered glass globe. The mounting arm shall have a slip fitter for 3-inch O.D. tenon mount. The fixture and arm shall be cast aluminum and shall have a polyester powder coat finish. All hardware shall be stainless steel.

(e) Pole wiring shall be No. 10 AWG stranded copper, Type THHN/THWN 600-volt cable, three conductors minimum (power, neutral, and ground), and shall be continuous from the fixture to the fuse holder. Pole wiring fuses shall be a Type FNM 10 ampere fuse with a Buss Type HEB in line fuse holder. Wire nuts shall not be permitted.

1001-2.11 WOOD POLE. Wood pole shall be 30-foot Class 3 full-length pressure-treated (PENTA) pole.

1001-2.12 UNDERGROUND SPLICES. Underground splices shall not be permitted unless approved by the CITY. No more than two underground splices shall be permitted on any continuous run of cable between feed points, poles, and junction boxes.

When the ENGINEER has determined that a splice is acceptable, the CONTRACTOR shall install a Homac, Type FSS splice. The splice shall then either be wrapped once with 3M tape, Type 130C, and twice with Scotch tape, Type Super 33 Plus, or install a Tyco Gel Wrap 6-inch type, RAY-GELWRAP-18/4-150-5PLC-CLOSR-6IN.

1001-3 CONSTRUCTION REQUIREMENTS

1001-3.1 FEEDER AND DISTRIBUTION CIRCUITS. All feeders and distribution circuits shall be of the multiple type, 120/240 volt, single phase, and shall consist of two or three conductors constituting one or two 120-volt circuits or a single 240-volt circuit. Plans shall indicate where three-wire circuits (2-120 volt) and two-wire circuits (1-120 volt or 1-240 volt) are to be installed.

The system shall be laid out on the Plans, and distribution circuits shall be routed as shown.

Individual lamp circuits shall be fused in the base of each lighting standard. Tape fuse kits with a 1/2-inch lapped layer for a distance of 1½ inches on each side of joint with conductor. Fuse holders to be complete with proper fuse to protect luminaire ballast. The neutral conductor shall be solidly connected and unfused throughout system.

Ground conductors shall be provided between all metal poles and associated feed points. Bond to metal pole, ground rod in pole base, feed point enclosure, feed point panels, relay cabinets, and ground rod.

Conductors shall be continuous from pole base to pole base or from feed point to pole base. Splicing conductors underground will not be allowed without specific approval of the ENGINEER.

1001-3.2 CABLE INSTALLATION: IN TRENCH AND/OR CONDUIT. Distribution circuits consisting of conductor cables, quantity and size as designated on Plans and installed direct burial in trench or in conduit, shall be installed to a depth of not less than 24 inches below finished grade. Under streets, driveways, and sidewalks, all conductors shall be installed in conduit, and the top of the conduit shall be not less than 24 inches below the top of concrete, asphalt, or hard surfacing.

Conductor cables shall be packed in sand to provide a cushion and to facilitate drainage in the following manners: Excavate trench to required minimum depth of 27 inches (exception of 36 inches from feed points to transformers, in easements, or as specified). Trench shall be filled with 3 inches of clean, washed sand bedding, leveled, and lightly tamped. Conductor cables, quantity, and size designated on plan shall be laid loosely in trench and spaced as per drawing detail. Conductor crossovers shall be avoided. CONTRACTOR may be required to utilize a paddle template ahead of the 3 inches of sand cover to ensure proper spacing. Cover sand shall not be less than 3 inches in depth over conductors. Sand shall again be leveled and lightly tamped the full width of the excavated trench. Trench shall then be backfilled and tamped in regular manner.

Marker tape shall be provided near the top of trench (6 inches below final grade) in all trenches. Cost shall be incidental to the trenching price.

If a specific excavation is judged to be free of rocks and debris, CONTRACTOR shall be allowed to utilize backfill without sand cushion upon approval of the ENGINEER.

Care shall be taken during installation of conductors to not bend or kink cable to a radius of less than six times the cable diameter.

On conductors installed on branch circuit feeders routed underground from pole to pole, all circuits shall be brought up into pole for splicing (especially lights on alternated circuits) unless indicated on Plans. No splicing will be allowed of underground cable. Splicing will only be allowed in junction boxes, pole bases, or feed point cabinets. Split bolts may NOT be used as a means of splicing or bonding.

Conduit shall be provided under hard-surfaced driveways, streets, and alleys and when rising up into feed points. Conduit not installed by direct burial shall be jacked or bored. Rigid steel galvanized conduits shall be installed when jacked or Heavy Wall Schedule 40, UL Listed PVC, may be utilized when installed with a directional bore. All conduits shall extend a minimum of 12 inches beyond each roadway, alley, driveway, or concrete surface, but not more than 18 inches or as directed by the ENGINEER. Rigid steel conduit ends shall be carefully reamed to provide a smooth surface for conductors. Plastic bushings shall be placed on rigid steel conduit ends, and PVC conduit ends shall be terminated with bell-type fittings. All cable run through conduit shall be pulled by hand and shall not be strained in any manner. A slack loop shall be provided in conductors prior to entering any conduit. All conduit installed, whether direct buried, bored, or jacked, shall be a minimum of 24 inches below finished grade. Where practical, conduit shall be sloped to provide drainage. Two-inch PVC conduit shall be provided for the risers at the pad-mounted feed points and 2-inch rigid steel galvanized at pole-mounted feed points.

If an obstruction is encountered when "jacking" or boring conduit under a concrete or asphalt street, driveway, or alley, or for any reason it becomes impractical to install the conduit in this manner, the ENGINEER may grant the CONTRACTOR permission to cut or saw the street, driveway, or sidewalk so conduit can be trenched into place. The width of the concrete or asphalt to be removed and the depth of the saw cutting shall be performed as directed by the ENGINEER. No extra payment will be made for cutting, removing, and replacing the concrete or asphalt. Cost of installing conduit by this method shall be included in the price for 2-inch conduit jacked or pulled in place. Street "cuts" shall not be started until permission is granted by the ENGINEER in writing.

Any excavations or exploratory cuts to any asphalt or concrete surface for the purpose of locating any existing underground utilities or obstructions to aid in the boring or jacking of conduit shall be included in the price bid for 2-inch conduit jacked or pulled in place including any traffic control requirements. No extra payment will be made for sawing, removing, and replacing the concrete or asphalt. The width of the concrete or

asphalt to be removed and the depth of the saw cutting shall be performed as directed by the ENGINEER.

In lieu of trenching to install either conductor or conduit, the CONTRACTOR may utilize directional boring. In this event, alignment and depth shall be maintained according to plan. Any deviation in alignment and/or depth shall be corrected by the CONTRACTOR as directed by the ENGINEER, at no cost to the CITY. CONTRACTOR shall be paid as if trenched by the appropriate unit price bid for 27-inch trenching plus the unit price bid for sod. Any conduit bored solely for the CONTRACTOR's convenience and/or not paid for at the unit price bid for jacked or bored conduit shall be the CONTRACTOR's expense, at the discretion of the ENGINEER, for those locations with existing grassed vegetation. The CONTRACTOR shall also be paid for the relocation of any mailbox without a concrete base that would have been relocated if the cable or conduit would have been installed by trenching. For mailboxes with concrete bases, the CONTRACTOR shall be paid for 2-inch conduit jacked or pulled in place beneath the concrete base.

Where excavations for cables or conduits are made, the backfill shall be compacted in 4-inch lifts or layers. Only suitable material as defined by Section 202-1c shall be used for backfill of trenches. Backfill with substandard material is prohibited even though such materials may have been excavated from the trench.

Excavated trenches shall be compacted by approved methods to 90 percent of maximum dry density at optimum moisture in accordance with ASTM D1557 when under future pavement or concrete areas (including sidewalks and driveways). Boulevards, grassed areas, and any other disturbed areas shall be compacted to 80 percent of maximum dry density at optimum moisture.

Any tree roots encountered and/or damaged during trenching or boring shall be handled according to Subsection 201-2.4 "Tree Root Cutting."

1001-3.3 JUNCTION BOX INSTALLATION. Junction boxes shall be provided and installed at locations shown on plans. Top of junction boxes shall be the same elevation as top of adjacent curb or sidewalk. Provide a 12-inch base of crushed rock or gravel as shown in standard detail. Ground rods (1/2 inch by 10 feet) shall be provided at all junction box locations.

Provide slack loop in all conductors so conductor can be pulled up out of junction box to a minimum of 24 inches above ground.

Splice connectors shall be as indicated in Subsection 1001-2.6 “Splice Connectors” and shall be raised off the bottom of the junction box such that they are directly below the junction box cover and positioned upward.

Tape connector kits with a half lapped layer of rubber or synthetic rubber tape and one layer of tape for a distance of 1½ inches each side of joint.

1001-3.4 STREET LIGHT FEED POINTS. Street light feed points consist of pole-mounted, pad-mounted, and modifications and additions to existing.

(a) Pad-Mounted (New). See detail drawing for typical details. New pad-mounted feed points shall be set on a concrete pad which is set on a 12-inch thickness of a crushed rock subbase. Provide 1-inch chamfer all around and down vertical sides to a minimum of 2 inches below grade.

Concrete pad shall be 52 inches long by 24 inches wide by 12 inches deep (52"L x 24"W x 12"D) and shall be constructed in accordance with Section 500 for Concrete Construction. Provide seven (7) 2-inch PVC stub outs down through concrete base and a minimum of 12 inches beyond edge of base. Point one (1) conduit towards power company transformer and six (6) towards direction of outgoing circuits. Provide two 1-inch conduits for ground rod conductors through the base only. Notify ENGINEER a minimum of 24 hours prior to pouring concrete base such that the form and cable entrance may be inspected. All unused conduits shall be sealed with a duct plug as manufactured by Tyco, Series JM. All utilized conduits shall be sealed with duct seal.

A concrete housekeeping pad shall be installed between the feed point foundation and the edge of the sidewalk, when sidewalks are already in place. The housekeeping pad shall run the length of the feed point foundation, and shall be 4 inches thick and meet the requirements of City sidewalks as detailed in Section 601 of the standard specifications.

Provide unistrut mounting brackets and a galvanized steel back panel.

Provide 40-amp two-pole breakers for each pair of 120-volt street light circuits that share a neutral conductor and a 15-amp one-pole breaker for control circuit, 20-amp one-pole breaker for convenience outlet.

Terminal blocks shall be provided by the CONTRACTOR for use for any connection within the feed point. Wire nuts shall not be permitted in pad-mounted feed points.

Provide one (1) relay for each 3-wire street light circuit (2-120V) or one (1) relay for each 2-wire street light circuit (1-240V).

Install switch to be connected into control circuit to bypass photocell for daytime test of street lights.

Install G.F.I. outlet.

Provide two 5/8-inch by 10-foot copper ground rods. The two ground rods shall be a minimum of 6 feet apart and shall be looped. Bond all circuits, relay cabinets, electric panel cabinet, enclosure, and neutral per NEC.
Photo cell shall be mounted on side of enclosure as shown on detail. Direct photo cell to north.

Provide 120/240-volt single-phase service from power company transformer. Service shall be installed in 2-inch, minimum, conduit with three (3) Type RHW-USE conductors. Underground service conductors for the feed point shall be 36 inches deep and shall be included in the cost of the feed point. Route conduit entrance through meter. Meter location shall be as shown on standard feedpoint detail. All unfused conductors within the feed point enclosure shall be placed in conduit.

Location of pad-mounted feed points as shown on plans shall be determined by location of power company pad-mounted transformer and by power company space requirements. CONTRACTOR shall verify location of power company pad mounted transformer.

(b) Pole-Mounted (New). Incoming service shall be fed from below grade unless otherwise shown on the plans. Provide 1½-inch steel galvanized conduit, minimum, and three (3) THW conductors. Route conduit entrance through meter. All unfused conductors within the feed point enclosure shall be placed in conduit. All utilized conduits shall be sealed with duct seal.

Wire nuts shall not be permitted in pole mounted feed points.

Provide two (2) 5/8-inch by 10-foot copper ground rod at bottom of pole as shown on Detail and ground enclosure and service. The two ground rods shall be a minimum of 6 feet apart and shall be looped. Bond all circuits, relay cabinets, electric panel cabinet, enclosure, and neutral per NEC.

Provide one (1) relay for each 3-wire street light circuit (2-120V) or one (1) relay for each 2-wire street light circuit (1-240V).

Feed points mounted on poles belonging to others shall conform to all requirements of the pole's owner, such as use of standoff brackets. The CONTRACTOR shall be responsible for coordinating with the pole's owner in conforming to their requirements. CONTRACTOR shall verify location of power company pad-mounted transformer.

(c) Pole-or Pad-Mounted: (Existing) Additions and Modifications. Provide additional relays and feeder conduits as shown or specified. Relays to match existing.

If cabinet is painted, paint entire exterior portion of each existing feed point associated with the project as follows:

1. Wire brush entire surface and sand with extra fine sandpaper.
2. Wipe down with thinner.
3. Brush or spray on two (2) coats of ZRC zinc dust primer.
4. Brush or spray two (2) coats of enamel paint, dark green, suitable for exterior use.

1001-3.5 STREET LIGHT STANDARD WITH CONCRETE FOUNDATIONS AND DIRECT BURIED.

Street light standards shall be set as shown on the plans with the hand hole facing away from curb and cable entrances parallel to roadway. Install 1/2-inch by 10-foot ground rod at each street light. All street light standards shall be grounded. Bond ground conductor, street light standard, and ground rod.

The conductor leads to the luminaire (power, neutral and ground) shall extend from the cable in the light standard base through a fuse holder with a fuse. The fuse holder shall be supported by the conductors at the level of the hand hole. Sufficient excess conductor length shall be provided to permit withdrawal of the fuse holder through the hand hole a minimum of 6 inches outside of the hand hole for purposes of installation and inspection. The neutral wire shall not be fused.

Luminaires shall be adjusted to supply light to roadway as directed by the ENGINEER.

The concrete to be used in the construction of the concrete housekeeping pads, base pads, and foundations shall be a minimum of 3,500 psi strength at 28 days with a minimum of six (6) bags of cement per cubic yard of concrete and shall conform in all respects to the City of Bismarck Specifications, Section 600 for Sidewalks, Driveways, Curb, and Combined Curb and Gutter.

(a) Direct-Buried Light Standards. A concrete housekeeping pad of dimensions shown in the standard detail shall be constructed around the base of the direct buried concrete standard. A concrete-bearing base pad 6 inches thick and 16 inches diameter, minimum, shall be provided under the bottom of the pole as shown. Provide roofing tar paper around poles between pole and concrete pad. In sidewalks, provide 3/4-inch expansion joint around concrete pad between concrete pad and sidewalk.

All costs of constructing the concrete pads and bases shall be included in the price bid for furnishing and installing concrete street light units.

(b) Light Standards with Concrete Foundations. Concrete foundations shall be installed as per standard detail. Foundations shall be completed with anchor bolts, rebar, and conduit stub-in. Anchor bolt spacing to accommodate poles shall be verified in the field prior to construction. The CONTRACTOR shall notify the ENGINEER at least 24 hours prior to pouring a concrete foundation such that the form with the anchor bolt placement, rebar, conduit stub-ins, and ground rod can be inspected. The CONTRACTOR shall provide concrete tests in conformance with City of Bismarck Specifications, a minimum of one (1) test per day or a minimum of one (1) test per five (5) light standard foundations or as directed by the ENGINEER.

1001-3.6 REPAIRS TO SIDEWALKS AND STREETS. In locations where sidewalks, pavement, driveways, or streets are opened for installation of cable, conduit, or poles, the removed area shall be replaced to the original thickness. The repair shall conform to either Sections 300 and 400 for AC Pavement or Section 500 for Concrete Repair.

In the event of the inability of the CONTRACTOR to either jack or bore conduit or cable under an improved area, the CONTRACTOR shall, with the ENGINEER's permission, be allowed to open cut the area. The CONTRACTOR shall minimize the area removed as much as possible but must allow enough area to allow for installation of cable or conduit and access for compactive equipment. The CONTRACTOR shall make cuts so that uniform edges for trenches may be obtained. In concrete, the CONTRACTOR shall utilize existing joints or sawed joints as required.

The backfill under all improved areas shall be Class A and shall be compacted to not less than 90 percent of maximum dry density at optimum moisture in accordance with ASTM D1557.

Where specified on plans, CONTRACTOR shall be paid at the unit price bid for Concrete or AC Pavement unless incidental. In the event of the inability of the CONTRACTOR to jack or bore under an improved area and an open cut is required, the CONTRACTOR shall be paid at the unit price bid for installed material only. Repair shall be at CONTRACTOR's expense.

In the event of damage of an improved area due to construction, all repair costs shall be borne solely by the CONTRACTOR.

All AC Pavement patches or repairs shall be seal coated in accordance with Section 400 "Flexible Surface Courses."

1001-3.7 SODDING. Sodding installation and care shall conform with Section 1203 of the CITY Specifications with the following exception: Existing sod shall be cleanly cut, removed, rolled up, kept moist, replaced, and paid per square yard of sodding. CONTRACTOR shall then be responsible for care as per CITY Specifications, Section 1203. Topsoil to a minimum depth of 4 inches shall be salvaged and replaced or provided and added to the top of the trench incidental to sodding bid item.

1001-3.8 MAILBOXES - REMOVE AND RESET. In some areas mail boxes are already in place behind the curb and will require removal and replacement to make way for trenching operations.

CONTRACTOR shall be responsible for:

1. Removal and replacement of mailboxes and shall make every effort to remove and replace in the same day. In the event this is not possible, CONTRACTOR shall construct a temporary wood base to hold mailboxes upright.

2. Coordination with Bismarck Post Office. The Post Office shall be informed when a mailbox is removed and not replaced for more than 24 hours to coordinate mail delivery.

Mailboxes shall be reinstalled with the front of box directly above the box side (property side) of the curb with the bottom of the box 38 inches above the top of curb. Boxes shall be plumb, level, set square with street, and tamped solidly in place.

Mailboxes installed on concrete pads and metal pedestals shall not be removed. A conduit shall be installed under the base as directed by the ENGINEER.

1001-3.9 NAMEPLATES. The CONTRACTOR shall provide nameplates per standard detail for all feed point cabinets. The nameplate shall consist of letters and/or numbers, printed on a thermosetting laminated plastic consisting of melamine or phenolic core and melamine surface.

The nameplates shall be mounted on the front of the feed point or control cabinet door with a combination of rivets and 3M adhesive similar to Type EC-847.

Nameplates to have a black background with white letters and/or numbers unless noted otherwise. One (1) 1½-inch by 6-inch nameplate and one (1) 1½-inch by 3-inch nameplate shall be provided for each new feed point and two (2) 1/2-inch by 1½-inch nameplates for each test switch. The feed point number and location shall be as designated on plans.

1001-3.10 REMOVAL OF STREET LIGHT STANDARDS. The standards shall be removed from the sites shown on the plans, salvaged, transported, and stored (by blocking and supporting at three points) in the CITY storage yard located at the Municipal Solid Waste Facility on North 52nd Street. The luminaire receptacle wires shall be disconnected at the fuses and the luminaire shall be removed from the mast arm, salvaged, and delivered to CITY stores at 601 South 26th Street. Where the Plans call for salvaging the conductors in place and resplicing these conductors, the standards shall be removed carefully to prevent damage to the conductors. Splices shall be made by using approved materials. The hole where the standard was removed shall be filled with earth supplied by the CONTRACTOR and tamped to the density of the surrounding soil.

1001-3.11 RELOCATE STREET LIGHT POLE. This item shall consist of removing a light standard from its present location and installing at either the same location or a new location as shown on the plans and connecting to the new or existing street light system wiring. The CONTRACTOR shall furnish any materials and equipment required for removing and replacing the street light pole. Where the Plan calls for relocating the pole, the CONTRACTOR shall fill the existing hole with earth supplied by the CONTRACTOR and tamped to a density of the surrounding soil.

1001-3.12 TESTS. When the installation is complete and at such time as may be specified by the ENGINEER, the CONTRACTOR shall conduct an operating test for approval. The equipment shall be demonstrated to operate in accordance with the requirement of the specifications, the plans, and to the satisfaction of the ENGINEER. The CONTRACTOR shall furnish all instruments and personnel required for all tests. All test results shall be recorded. The CONTRACTOR shall be present during all tests

and inspections unless so informed by the ENGINEER. Nighttime tests and inspections may be held at the option of the ENGINEER.

1001-4 MEASUREMENT AND PAYMENT

1001-4.1 THRU 1001-4.7 TYPE (X) STREET LIGHT UNITS (150 Watt HPS).
1001-4.2 TYPE B1 STREET LIGHT UNITS (250 Watt HPS).
Type B and B1 Street Light Units consist of:

1. Designated luminaire with ballast and lamp.
2. Concrete direct-buried poles with bracket.
3. Wiring and connections to underground circuits.
4. Ground rod with connections.
5. Fuse holder and fuses.
6. Concrete housekeeping pads and concrete-bearing base pads.
7. Unit set in place and ready for operation.

Measurement for payment shall be on a per each (EA) unit basis for each complete unit installed and ready for operation.

1001-4.3 TYPE C STREET LIGHT UNITS (250-Watt HPS).
1001-4.4 TYPE C1 STREET LIGHT UNITS (400-Watt HPS).
Type C and C1 Street Light Units consist of:

1. Designated luminaire with ballast and lamp.
2. Galvanized steel, bolt-down, base-type pole with bracket.
3. Wiring and connections to underground circuits.
4. Fuse holder and fuses.
5. Reinforced concrete base, anchor bolts, anchor bolt covers, ground rod, and conduit.
6. Unit set in place and ready for operation.

Measurement for payment shall be on a per each (EA) unit basis for each complete unit installed and ready for operation.

1001-4.5 TYPE BR STREET LIGHT UNITS (150-WATT HPS).
1001-4.6 TYPE D1 STREET LIGHT UNITS (150-WATT HPS).
1001-4.7 TYPE D2 STREET LIGHT UNITS (150-WATT HPS).
Type BR, D1, and D2 Street Light Units consist of:

1. Designated luminaire with ballast and lamp.
2. Concrete direct buried poles.
1. Wiring and connections to underground circuits.
2. Ground rod with connection.
3. Fuse holder and fuses.
4. Concrete base and housekeeping pad. Concrete housekeeping pads and concrete-bearing base pads.

5. Unit set in place and ready for operation.

Measurement for payment shall be on a per each (EA) unit basis for each complete unit installed and ready for operation.

1001-4.10 TWO-INCH CONDUIT "JACKED" OR PULLED IN PLACE.

(1) Two-inch conduit jacked in place shall be 2-inch steel rigid galvanized conduit, jacked in place at proper depth sloped for drainage complete with bushings each end and extending 12 inches beyond each side of roadway, drive, or walk or 2-inch PVC (Schedule 40) pulled in placed by use of direct bore or drill. PVC shall be sloped similar to 2-inch rigid.

(2) Excavations required for "setting up" for pushing or drilling conduit shall be a part of the conduit installation price. This includes breaking out and replacing concrete, asphalt, excavations, filling and tamping, and replacement of grass or sod.

Measurement for payment shall be for each linear foot (LF) of conduit installed and approved by the ENGINEER.

1001-4.11 TWO-INCH CONDUIT - PVC LAID IN TRENCH. Two-inch conduit, PVC Laid in Trench shall include conduit laid in a trench free of voids and rocks, sloped for drainage, and properly backfilled as per specifications. Trenching cost is part of Subsection 1001-4.12 "Trenching - 27-Inch Depth."

Measurement for payment shall be for each linear foot (LF) of conduit installed and approved by the ENGINEER.

1001-4.12 TRENCHING - 27-INCH DEPTH. Trenching shall include all excavation required for conductor trenches, sand cushion, backfill, tamping, and marker tape.

Measurement for payment shall be for each linear foot (LF) of trench excavated, backfilled, tamped, and with surface restored to original conditions all as accepted and approved by the ENGINEER.

1001-4.20 JUNCTION BOXES. Junction boxes shall include all splice connectors, excavated, backfilled, tamped, and with surface restored to original conditions.

Measurement for payment shall be for each (EA) junction box installed complete and accepted by the ENGINEER.

1001-4.21 and 1001-4.22 (X)-NO. 4 CONDUCTORS. Three (3) No. 4 or two (2) No. 4 stranded copper, as the case may be, Type RHW-USE single conductor - 600-volt direct burial cables laid in common trench and/or conduit shall be measured by the linear foot (LF) of three (3) No. 4 or two (2) No. 4 single conductors furnished and installed in trenches/conduits. Measurement will be from centerline to centerline of pole

or feed point. CONTRACTOR shall make allowance for necessary conductors in and out of poles and feed point in unit price.

Payment shall be at the unit price bid for each linear foot (LF) of 3- or 2-wire conductor installed and accepted by the ENGINEER. Two-wire conductor shall be paid for under bid item 1001-4.21, and 3-wire shall be paid for under 1001-4.22.

1001-4.23 & 4.24 (X)-NO. 2 CONDUCTORS. Two (2) No. 2 or three (3) No. 2 stranded copper, as the case may be, Type RHW-USE single conductor - 600-volt direct burial cables laid in common trench and/or conduit shall be measured by the linear foot of two (2) No. 2 or three (3) No. 2 single conductors furnished and installed in trenches/conduits. Measurement will be from centerline to centerline or pole or feed point. CONTRACTOR shall make allowance for necessary conductors in and out of poles and feed point in unit price.

Payment shall be at unit price for each linear foot (LF) of 3- or 2-wire conductor installed and accepted by the ENGINEER. Two-wire conductor shall be paid for under bid item 1001-4.23, and 3-wire shall be paid for under 1001-4.24.

1001-4.25 NO. 6 COPPER GROUND. TYPE T OR BARE. No. 6 Copper Type TW or Bare shall include all grounding conductor, ground rods, and connections. Ground rods (1/2 inch by 10 feet) shall be provided at all junction boxes where No. 6 ground wire is required as part of system.

Measurement for payment shall be based on each linear foot (LF) of No. 6 conductor installed and measured from junction box or pole foundation along centerline of trench or duct.

1001-4.26 MAIL BOXES - REMOVE AND RESET. Multiple boxes on a single or double support structure shall be measured and paid for per support removed and replaced.

Payment shall be for each (EA) group removed, reset, and approved by the ENGINEER.

1001-4.27 SODDING. Conversion from square yards to linear feet shall be: 1 square yard equals 6 linear feet Sod and shall be measured and paid for under Subsection 1203-4.1.

1001-4.28 STREET LIGHT BASE. This item consists of constructing concrete bases per specifications and standard details for street light standards.

Street light bases shall be measured per each (EA) and paid for at the unit price bid for street light bases complete, in place, and accepted by the ENGINEER.

1001-4.29 REMOVE STREET LIGHT STANDARD. This item shall consist of removal, transport, and storage of street light standards.

Measurement for payment shall be per each (EA) street light standard removed and stored and accepted by the ENGINEER.

1001-4.30 RELOCATE STREET LIGHT POLE. This item shall consist of removing, relocating/resetting, and reconnecting conductors not to be abandoned and measured per each (EA) pole in place and accepted by the ENGINEER.

1001-4.31 and 1001-4.32 (X) NO. 6 CONDUCTOR. Three (3) No. 6 or two (2) No. 6 stranded copper, as the case may be, Type RHW-USE single conductor - 600-volt direct burial cables laid in common trench and/or conduit shall be measured by the linear foot (LF) of three (3) No. 6 or two (2) No. 6 single conductors furnished and installed in trenches/conduits. Measurement will be from centerline to centerline of pole or feed point. CONTRACTOR shall make allowance for necessary conductors in and out of poles and feed point in unit price.

Payment shall be at the unit price bid for each linear foot (LF) of three (3) or two (2) wire conductor installed and accepted by the ENGINEER. 2-wire conductor shall be paid for under bid item 1001-4.31, and 3- wire shall be paid for under 1001-4.32.

SECTION 1200

MISCELLANEOUS CONSTRUCTION

SECTION 1201 – TOPSOIL

1201-1 DESCRIPTION

This item shall consist of preparing the ground surface for topsoil application, removing topsoil from designated stockpiles or areas to be stripped on the site or from approved sources off the site, and placing and spreading the topsoil on prepared areas in accordance with this specification at the locations shown on the plans as directed by the ENGINEER.

1201-2 MATERIALS

1201-2.1 TOPSOIL. Topsoil shall be the surface layer of soil with no admixture of refuse or any material toxic to plant growth, and it shall be reasonably free from subsoil and stumps, roots, brush, stones (2 inches or more in diameter), clay lumps, or similar objects. Brush and other vegetation which will not be incorporated with the soil during handling operations shall be cut and removed. Ordinary sods and herbaceous growth such as grass and weeds are not to be removed but shall be thoroughly broken up and intermixed with the soil during handling operations. The topsoil or soil mixture, unless otherwise specified or approved, shall have a pH range of approximately 5.5 pH to 7.6 pH, when tested in accordance with the methods of testing of the Association of Official Agricultural Chemists in effect on the date of invitation of bids. The organic content shall be not less than 3 percent nor more than 20 percent as determined by the wet-combustion method (Chromic acid reduction). There shall be not less than 20 percent nor more than 80 percent of the material passing the 200 mesh sieve as determined by the wash test in accordance with ASTM D1140.

Natural topsoil may be amended by the CONTRACTOR with approved materials and methods to meet the above specifications.

1201-2.2 INSPECTION AND TESTS. When topsoil is to be imported, the ENGINEER shall be notified of the source of topsoil, a minimum of 10 days prior to installation, to be furnished by the CONTRACTOR. The topsoil shall be inspected to determine if the selected soil meets the requirements specified and to determine the depth to which stripping will be permitted. At this time, the CONTRACTOR may be required to take representative soil samples from several locations within the area under consideration and to the proposed stripping depths, for testing purposes as specified in Subsection 1201-2.1.

1201-3 CONSTRUCTION REQUIREMENTS

1201-3.1 GENERAL. Areas to be topsoiled shall be shown on the plans. If topsoil is available on the site, the location of the stockpiles or areas to be stripped of topsoil and the stripping depths shall be shown on the plans.

Suitable equipment necessary for proper preparation and treatment of the ground surface, stripping of topsoil, and for the handling and placing of all required materials shall be on hand, in good condition, and approved by the ENGINEER before the various operations are started.

1201-3.2 PREPARING THE GROUND SURFACE. Immediately prior to dumping and spreading the topsoil on any area, the surface shall be loosened by disks or spike-tooth harrows, or by other means approved by the ENGINEER, to a minimum depth of 2 inches to facilitate bonding of the topsoil to the covered subgrade soil. Unless otherwise approved by the ENGINEER, the surface of the area to be topsoiled shall be cleared of all stones larger than 2 inches in diameter. All litter or other material which may be detrimental to proper bonding shall be removed.
Grades on the area to be topsoiled, when established by others as per plans, shall be maintained in a true and even condition. Where grades have not been established, the areas shall be smooth-graded and the surface left at the prescribed grades in an even and properly compacted condition to prevent, insofar as practical, the formation of low places or where water will stand.

1201-3.3 OBTAINING TOPSOIL. Prior to the stripping of topsoil from designated areas, any vegetation, briers, stumps and large roots, rubbish, or stones found on such areas, which may interfere with subsequent operations, shall be removed using methods approved by the ENGINEER. Heavy sod or other cover, which cannot be incorporated into the topsoil by disking or other means, shall be removed.

When suitable topsoil is available on the site, the CONTRACTOR shall remove this material from the designated areas and to the depth as directed by the ENGINEER. The topsoil shall be spread on areas already tilled and smooth graded, or stockpiled in areas approved by the ENGINEER. Any topsoil stockpiled by the CONTRACTOR shall be rehandled and placed without additional compensation. Any topsoil that has been stockpiled on the site by others, and is required for topsoiling purposes, shall be removed and placed by the CONTRACTOR. The sites of all stockpiles and areas adjacent thereto, which have been disturbed by the CONTRACTOR, shall be graded if required and put into a condition acceptable for seeding.

When suitable topsoil is secured off the project site, the CONTRACTOR shall locate and obtain the supply, subject to the approval of the ENGINEER. The CONTRACTOR shall notify the ENGINEER sufficiently in advance of operations in order that necessary measurements and tests can be made. The CONTRACTOR shall remove the topsoil from approved areas and to the depth as directed. The topsoil shall be hauled to the site of the work and placed for spreading or spread as required. Any topsoil hauled to

the site of the work and stockpiled shall be rehandled and placed without additional compensation.

1201-3.4 PLACING TOPSOIL. The topsoil shall be evenly spread on the prepared areas to a uniform depth of 4 inches after compaction unless otherwise shown on the plans or stated in the special provisions. Spreading shall not be done when the ground or topsoil is frozen, excessively wet, or otherwise in a condition detrimental to the work. Spreading shall be carried on so that turfing operations can proceed with a minimum of soil preparation or tilling.

After spreading, any large, stiff clods and hard lumps shall be broken with a pulverizer or by other effective means. All roots, litter, foreign matter, and stones or rocks 2 inches or more in diameter, unless otherwise approved by ENGINEER, shall be removed and disposed of by the CONTRACTOR. After spreading is completed, the topsoil shall be satisfactorily compacted by rolling with a cultipacker or by other means approved by the ENGINEER. The compacted topsoil surface shall conform to the required lines, grades, and cross sections. Any topsoil or other dirt falling upon pavements as a result of hauling or handling of topsoil shall be promptly removed.

1201-4 MEASUREMENT AND PAYMENT

1201-4.1 TOPSOILING. Topsoiling shall be measured by the cubic yard (CY) and paid for at the unit price bid for "Topsoiling" complete, in place, and accepted by the ENGINEER. When topsoil is weighed for final quantity, it shall be converted to cubic yards at the rate of 1.3 tons per cubic yard or at a rate approved by the ENGINEER.

SECTION 1202 – SEEDING

1202-1 DESCRIPTION

This item shall consist of seeding the areas shown on the plans or as directed by the ENGINEER in accordance with these specifications.

1202-2 MATERIALS

1202-2.1 SEED. All seed shall be of certified class quantity and shall be certified by the state in which the seed variety was grown. All seed containers must be sealed and labeled to comply with existing North Dakota Seed Laws and Regulations or in accordance with U.S. Department of Agriculture Rules and Regulations under the Federal Seed Act, if shipped in Interstate Commerce. Seed shall be furnished separately or in mixtures in standard containers with the seed name including variety and species, lot numbers net weight, and percentages of maximum weed seed content clearly marked for each kind of seed. The CONTRACTOR shall furnish the ENGINEER duplicate signed copies of a statement by the vendor certifying that each lot of seed has been tested by a recognized laboratory for seed testing within 9 months of date of delivery. Seed not planted within the 9-month period shall be retested for dormant seed, hard seed, and germination, and a new certified test report furnished. This statement shall include: Name and address of laboratory, date of test, lot number for each kind of seed, and the results of tests as to name, percentages of purity and of germination, and percentage of weed content for each kind of seed furnished and, in case of a mixture, the proportions of each kind of seed. The minimum acceptable purity, germination, weed seed, and other crop seed are those of certified class seed.

Seed which has become wet, moldy, or otherwise damaged in transit or in storage will not be acceptable.

Seed mixture shall contain not less than the specified percent of pure live seed and shall be uniformly mixed by weight to one of the following formulas:

SEED CLASSIFICATION TABLE
(Rate of Application of Pure Live Seed)

Percent by Weight	Variety and Species of Grass Seed	Percent Pure Live Seed

NOTE: R = Rhizomatous Variety and B = Bunch Grass Variety

Class I
(For Pasture or Hayland, Fairly Level Surface)
(50 lbs./acre)

40	'MDN-759' Pubescent Wheat Grass (R)	85
40	'NORDAN' Crested Wheat Grass (B)	85
20	'PRIMAR' Slender (B) or 'OAHE' Intermediate Wheat Grass (R)	85

Class II
(Turfgrass)
(Restoration of Established Lawns)
(5 lbs./100 SY)

60	'PARK' Kentucky Blue Grass (R)	85
30	Perennial Ryegrass	85
10	'ARCTARED' Creeping Red Fescue (R) or 'DURAR' Hard Fescue (R)	85

Class III
(For Level Surface or Gentle Slopes)
(50 lbs./acre)

100	'LINCOLN' Smooth Brome Grass (R)	85

Class IV
(For Slopes 3:1 or More)
(50 lbs./acre)

50	'LINCOLN' Smooth Brome Grass (R)	85
50	'NORDAN' Crested Wheat Grass (B)	85

Class V
(For Critical, Saline Area)
(25 lbs./acre)

40	'PARKWAY' Fairway Crested Wheat Grass (B)	85
20	'PRIMAR' Slender Wheat Grass (B)	85
40	'ROSANA' Western Wheat Grass (R)	85

Class VI

As specified on the plans or in the special provisions

When Class V seed mixture is specified, it shall be sown at the rate of 25 pounds per acre; 40 to 60 pounds of phosphorus and 20 to 30 pounds of actual nitrogen per acre shall be mixed into the upper 3 inches of the soil or spread on the soil prior to seeding or by means of fertilizer attachment on the drill. Fertilizer shall not be mixed with the seed.

When Class I, III, IV, or V seed mixture is specified and seeding is performed between August 20 and September 20, or when dormant seeding in late fall, 30 pounds of oats or rye seed per acre shall be added to the mixture as a nurse crop. This nurse crop shall be mowed before it reaches 6 inches in height.

If seed with the specified percentage of pure live seed cannot be obtained, additional seed may be used to bring the amount of live seed up to the amount specified. Seed and seeding mixtures shall be free of all prohibited noxious weed seed and shall not contain more than .5 percent by weight of restricted noxious weed seeds. Prohibited and restricted noxious weeds shall be those as classified by the State Seed Department.

1202-2.2 TOPSOIL. Topsoil shall conform to Section 1201.

1202-2.3 LIME. Lime, if specified, shall be ground limestone containing not less than 85 percent of total carbonates, and shall be ground to such fineness that 90 percent will pass through a No. 20 mesh sieve and 50 percent will pass through a No. 100 mesh sieve. Coarser material will be acceptable, providing the rates of application are increased to provide not less than the minimum quantities and depth specified by an approved testing laboratory on the basis of the 2-sieve requirements above. Dolomitic lime or high magnesium lime shall contain at least 10 percent of magnesium oxide.

1202-2.4 FERTILIZER. Fertilizer, if specified, shall be standard commercial fertilizers supplied separately or in mixtures containing the percentages of total nitrogen, available phosphoric acid, and water soluble potash. They shall be applied at the rate and to the depth specified and shall meet the specified requirements of the applicable state and federal laws. They shall be furnished in standard containers with name, weight, and guaranteed analysis of contents clearly marked thereon. No cyanamide compounds of hydrated lime shall be permitted in mixed fertilizers.

The fertilizers may be supplied prior to seeding in one of the following forms:

(a) A dry, free-flowing fertilizer suitable for application by a common fertilizer spreader;

(b) A finely ground fertilizer soluble in water, suitable for application by power sprayers; or

(c) A granular or pellet-form suitable for application by blower equipment.

(i) Fertilizer shall not be applied after seeding.

(ii) The fertilizer shall not be mixed with the seed, but it may be applied at the same time as the seed if a suitable fertilizer attachment on the equipment is used.

(iii) The fertilizer may be mixed into the hydro mulch mixture as it is applied.

1202-2.5 SOIL FOR REPAIRS. The soil for fill and topsoil of areas to be repaired shall be at least of equal quantity to that which exists in areas adjacent to the area to be repaired. The soil shall be relatively free from large stones, roots, stumps, or other materials that will interfere with subsequent sowing of seed, compacting, and establishing turf, and shall be approved by the ENGINEER before being placed.

1202-2.6 RESEEDING AND REPAIR. Damage caused from wind or water erosion, CONTRACTOR's operation, or traffic, which can be repaired with equipment normally used for seeding work, shall be repaired at the CONTRACTOR's expense. The CONTRACTOR shall make any repairs as directed by the ENGINEER prior to final acceptance.

1202-3 CONSTRUCTION REQUIREMENTS

1202-3.1 SEEDING DATES. Seeding shall be done at such times of the year when the climatic conditions of temperature and moisture are most adaptable for growth and work of this nature. It is preferred that seeding shall be accomplished before May 20 and after October 20 of each year. Plant after October 20 when there is no chance of fall germination as dormant seedings are made for spring germination. Also plant early enough in fall to allow at least forty (40) days for seedlings to develop before they go dormant in the fall, preferably before September 10. Planting between May 20 and September 10 will be allowed if adequate moisture can be provided.

1202-3.2 SEEDBED PREPARATION. The areas to be seeded shall be cleared of all debris, rank vegetation, and other material that is detrimental to the preparation of a seed bed. The areas thus cleared shall be shaped or bladed by approved equipment to the plan's cross section or to such cross section that best fits the existing conditions. The areas thus prepared shall be disked, harrowed, raked, or worked by some other approved method, into a reasonably smooth, even seed bed. The surface of the prepared seed bed shall be firm enough so that adult footprints are hardly visible and will limit seeding depth to a maximum of 3/4 of an inch. If rolling is necessary to secure this, it shall be done prior to the seeding and with an approved roller, the weight of which shall be dependant upon the particular soil conditions.

All slopes shall be worked on the contour, or as directed by the ENGINEER.

Fertilizer and/or lime, when specified, shall be spread and worked into the soil during the final preparation of the seed bed.

The CONTRACTOR shall take four (4) representative and suitably sized samples of the soils which are to form the seed bed and shall submit these samples to an approved testing laboratory for analysis and recommendation of fertilizer to be used. Sampling and testing shall be done with sufficient promptness so as to avoid delaying the work. Test results shall be submitted to the ENGINEER.

1202-3.3 SEED APPLICATION. Seed shall be sown by means of a force feed drill with a grass seed attachment which provides a uniform flow and depth of seed placement (1/4 to 1/2 inch), except that on slopes steeper than three to one or on areas too small to be seeded with a force feed drill, seed may be sown by power sprayers, blowers, or other approved methods. Grass drills shall be calibrated to ensure proper seeding rates (pure live seed rate divided by purity and germination percentages) for calibrating the drill. The soil shall be repacked immediately after the seed is applied to firm the soil

around the seed. All equipment shall be in good working order and shall be approved by the ENGINEER.

Kentucky Bluegrass shall be seeded a very shallow depth or on the surface and cultipacked.

No seed shall be sown during winds that are strong enough to prevent it from being properly imbedded into the surface.

No seed shall be sown in standing water or frozen ground.

When specified, mulching shall be applied immediately or within 24 hours after seed application in accordance with Section 1203.

1202-3.4 ESTABLISHING GRASS STAND. The seeded area shall be kept moist until it has germinated and its continued growth assured. In all cases, watering shall be done in a manner which will avoid erosion from the application of excessive quantities and will avoid damage to the finished surface. Water will be considered incidental to the item "Seed."

All seeded areas shall be protected against traffic or other use by warning signs or barricades approved by the ENGINEER.

Additional watering during dry periods and mowing of seeded areas shall be performed until the stand is firmly established. Weeds or other undesirable vegetation shall be rotary mowed above the new grass seedlings before they reach a height of 6 inches, and the clippings shall be raked and removed from the area.

Broadleaf weeds shall be controlled by rotary mowing or by applying a post emergence herbicide in accordance with North Dakota State University Weed Control Guide and manufacturer’s recommendations after majority of grass plants have 3 leaves or more and weeds reach a 4-inch height.

1202-3.5 GRASS STAND ACCEPTANCE. To determine adequacy of stands and to determine if reseeding or reinforcement seeding is required, the stand shall be evaluated by the ENGINEER and shall meet the following requirements before the grass stand is accepted: Seedling emergence shall be uniform over the entire area. Stand counts shall indicate a density of at least 20 to 30 seedlings per square foot of area. Twenty seedlings per square foot for rhizomatous-type species and 30 for a bunch-type or a mixture of bunch-type and rhizomatous-type.

The CONTRACTOR shall furnish and replace without compensation therefor, any seed for areas that have not germinated, have died, or are damaged to the extent that replacement is required to conform to the requirements outlined above. The contract warranty period shall also apply to this item.

1202-3.6 MAINTENANCE OF ACCEPTED SEED STAND. The intent of this specification is to provide for maintenance of the new growth of grass beyond the date of grass stand acceptance. During the maintenance period, which is from the date of the grass stand acceptance to the date of acceptance of the contract for final payment, the grass stand shall be mowed, watered, fertilized, and/or protected from damage by erosion, traffic, or weeds in order to maintain a healthy regrowth of grass in the seeded area. This maintenance shall be paid for under a separate bid item from the seeding.

1202-4 MEASUREMENT AND PAYMENT

1202-4.1 THRU 1202-4.6 SEEDING CLASS (X). Seeding Class (X) shall be measured by the square yard (SY) and paid for at the unit price bid for "Seeding Class (X)" complete, in place, and accepted by the ENGINEER.

1202-4.7 GRASS MAINTENANCE. Grass Maintenance shall be measured by the lump sum (LS) and paid for at the unit price bid for "Grass Maintenance" complete, in place, and accepted by the ENGINEER.

SECTION 1203 – SODDING

1203-1 DESCRIPTION

This item shall consist of furnishing, hauling, and placing approved live sod on prepared areas in accordance with this specification at the locations shown on the plans or as directed by the ENGINEER.

1203-2 MATERIALS

1203-2.1 SOD. Sod furnished by the CONTRACTOR shall have a good cover of living or growing grass. This shall be interpreted to include grass that is seasonally dormant during the cold or dry seasons and capable of renewing growth after the dormant period. All sod shall be obtained from where the soil is reasonably fertile and contains a high percentage of loamy topsoil. Sod shall be cut or stripped from living, thickly matted turf relatively free of weeds or other undesirable foreign plants, large stones, roots, or other materials which might be detrimental to the development of the sod or to future maintenance. At least 70 percent of the plants in the cut sod shall be composed of the species stated in the special provisions, and any vegetation more than 6 inches in height shall be mowed to a height of 3 inches or less before sod is lifted. Sod, including the soil containing the roots and the plant growth shown above, shall be cut uniformly to a thickness not less than that stated in the special provisions.

1203-2.2 LIME. Lime, if specified, shall conform to the requirements of Subsection 1202-2.3.

1203-2.3 FERTILIZER. Fertilizer, if specified, shall conform to the requirements of Subsection 1202-2.4.

1203-2.4 WATER. The water shall be sufficiently free from oil, acid, alkali, salt, or other harmful materials that would inhibit the growth of grass. It shall be subject to the approval of the ENGINEER prior to use.

1203-2.5 SOIL FOR REPAIRS. The soil for fill and topsoiling of areas to be repaired shall conform to the requirements of Subsection 1202-2.5.

1203-3 CONSTRUCTION REQUIREMENTS

1203-3.1 GENERAL. Areas to be solid, strip, or spot sodded shall be shown on the plans. Areas requiring special ground surface preparation such as tilling and those areas in a satisfactory condition which are to remain undisturbed shall also be shown on the plans.

Suitable equipment necessary for proper preparation of the ground surface and for the handling and placing of all required materials shall be on hand, in good condition, and shall be approved by the ENGINEER before the various operations. The

CONTRACTOR shall demonstrate to the ENGINEER before starting the various operations that the application of required materials will be made at the specified rates.

1203-3.2 PREPARING THE GROUND SURFACE. After grading of areas has been completed and before applying fertilizer and limestone, areas to be sodded shall be raked or otherwise cleared of stones larger than 2 inches in any diameter, sticks, stumps, and other debris which might interfere with sodding, growth of grasses, or subsequent maintenance of grass covered areas. If any damage by erosion or other cause occurs after grading of areas and before beginning the application of fertilizer and ground limestone, the CONTRACTOR shall repair such damage. This may include filling gullies, smoothing irregularities, and repairing other incidental damage.

1203-3.3 APPLYING FERTILIZER AND GROUND LIMESTONE. Following ground surface preparation, fertilizer shall be uniformly spread at a rate which will provide not less than the minimum quantity of each fertilizer ingredient, as stated in the special provisions. If use of ground limestone is required, it shall then be spread at a rate which will provide not less than the minimum quantity stated in the special provisions. These materials shall be incorporated into the soil at a depth of not less than 2 inches by disking, raking, or other methods acceptable to the ENGINEER. Any stones larger than 2 inches in any diameter, large clods, roots, and other litter brought to the surface by this operation shall be removed.

1203-3.4 OBTAINING AND DELIVERING SOD. After inspection and approval of the source of sod by the ENGINEER, the sod shall be cut with approved sod cutters to such a thickness that after it has been transported and placed on the prepared bed, but before it has been compacted, it shall have a uniform thickness of not less than 2 inches. Sod sections or strips shall be cut in uniform widths, not less than 10 inches, and in lengths of not less than 18 inches, but of such length as may be readily lifted without breaking, tearing, or loss of soil. Where strips are required, the sod must be rolled without damage with the grass folded inside. The CONTRACTOR may be required to mow high grass before cutting sod.

The sod shall be transplanted within 24 hours from the time it is stripped, unless circumstances beyond the CONTRACTOR's control make storing necessary. In such cases, sod shall be stacked, kept moist, and protected from exposure to the air and sun and shall be kept from freezing. Sod shall be cut and moved only when the soil moisture conditions are such that favorable results can be expected. Where the soil is too dry, permission to cut sod may be granted only after it has been watered sufficiently to moisten the soil to the depth the sod is to be cut.

1203-3.5 LAYING SOD. Sodding shall be performed only during the seasons when satisfactory results can be expected. Frozen sod shall not be used and sod shall not be placed upon frozen soil. Sod may be transplanted during periods of drought with the approval of the ENGINEER, provided the sod bed is watered to moisten the soil to a depth of at least 4 inches immediately prior to laying the sod.

The sod shall be moist and shall be placed on a moist earth bed. Pitchforks shall not be used to handle sod and dumping from vehicles shall not be permitted. The sod shall be carefully placed by hand, edge to edge and with staggered joints, in rows at right angles to the slopes, commencing at the base of the area to be sodded and working upward. The sod shall immediately be pressed firmly into contact with the sod bed by tamping or rolling with approved equipment to provide a true and even surface, and ensure knitting without displacement of the sod or deformation of the surfaces of sodded areas. Where the sod may be displaced during sodding operations, the workmen when replacing it shall work from ladders or threaded planks to prevent further displacement. Screened soil of good quality shall be used to fill all cracks between sods. The quantity of the fill soil shall not cause smothering of the grass. Where the grades are such that the flow of water will be from paved surfaces across sodded areas, the surface of the soil in the sod after compaction shall be set approximately 1 inch below the pavement edge. Where the flow will be over the sodded areas and onto the paved surfaces around manholes and inlets, the surface of the soil in the sod after compaction shall be placed flush with the pavement edges.

On slopes steeper than 1 vertical to 2½ horizontal and in V-Shaped or flat bottom ditches or gutters, the sod shall be pegged with wooden pegs not less than 12 inches in length and have a cross-sectional area of not less than 3/4 square inch. The pegs shall be driven flush with the surface of the sod.

1203-3.6 CLEANUP. After the staking has been completed, the surface shall be cleaned of loose sod, excess soil, or other foreign materials before watering.

1203-3.7 WATERING. Adequate water and watering equipment must be on hand before sodding begins. Sod shall be kept moist until it has become established and its continued growth assured. In all cases, watering shall be done in a manner which will avoid erosion from the application of excessive quantities and will avoid damage to the finished surface.

1203-3.8 ESTABLISHING TURF.

(a) General. The newly placed sod shall be kept in good condition during the care period following placement. The care period after placement of the sod shall be 14 days' duration for sod placed before July 15 and after September 15; and shall be 21 days' duration for sod placed between July 15 and September 15.

The time between October 15 of any year and April 15 of the following year shall not be considered to be a part of the required care period for sod. Sod replaced after October 15 of any year, or sod placed at a time when the care period for that sod extends past October 15, shall show evidence of establishing growth after April 15 of the following year before its care period will be considered concluded.

Water shall be applied to the sod during the care period, at a rate of 5 gallons per square yard, immediately after placement and again at 7 days and 14 days after placement.

For sod placed between July 15 and September 15, an additional 5 gallons per square yard shall be applied 21 days after sod placement.

Water shall be applied by sprinkling or any method approved by the ENGINEER that prevents wasting the water by runoff from the sod area. If necessary to prevent runoff, several hours of application of the water may be required. The amount of water to be applied may be reduced by the ENGINEER if in his opinion there has been enough rainfall to warrant a reduction.

The CONTRACTOR shall furnish and replace, without any compensation therefor, any sod that dies or is damaged to the extent replacement is required during the care period. Replacement sod shall be installed under the same specification requirements as those for the original sod being replaced, including the care period.

Water will be considered incidental to the item "Sodding."

(b) Protection. All sodded areas shall be protected against traffic or other use by warning signs or barricades approved by the ENGINEER.

(c) Mowing. The CONTRACTOR shall mow the sodded areas with approved mowing equipment, depending upon climatic and growth conditions and the needs for mowing specific areas. In the event weeds or other undesirable vegetation are permitted to grow to such an extent that, either cut or uncut, they threaten to smother the sodded species, they shall be mowed and the clippings raked and removed from the area.

1203-3.9 REPAIRING. When the surface has become gullied or otherwise damaged during the period covered by the contract, the affected areas shall be repaired to re-establish the grade and the condition of the soil, as directed by the ENGINEER, and shall then be re-sodded as specified in Subsection 1203-3.5.

1203-4 MEASUREMENT AND PAYMENT

1203-4.1 SODDING. Sodding shall be measured by the square yard (SY) and paid for at the unit price bid for "Sodding" complete, in place, and accepted by the ENGINEER.

SECTION 1204 – MULCHING

1204-1 DESCRIPTION

This item shall consist of furnishing, hauling, placing, and securing mulch on surfaces indicated on the plans or designated by the ENGINEER. The mulch is used to conserve moisture, prevent surface compaction or crushing, reduce runoff and erosion, control weeds, and help hasten establishment of plant cover.

1204-2 MATERIALS

1204-2.1 MULCH MATERIAL. Acceptable mulch shall be the materials listed below or any approved locally available material that is similar to those specified. Low-graded, musty, spoiled, partially rotted hay, straw, or other materials unfit for animal consumption will not be acceptable. Mulch materials which contain matured seed of species which would volunteer and be detrimental to the proposed over seeding, or to surrounding farmland, will not be acceptable. Straw or other mulch material which is fresh and/or excessively brittle, or which is in such an advanced stage of decomposition as to smother or retard the planted grass, will not be acceptable.

(a) Hay. Hay shall be native hay, Sudan grass hay, broomsedge hay, legume hay, or similar hay or grass clippings. Average length shall be 10 inches. Leguminous plants shall not exceed 25 percent of the dry weight of the mulch.

(b) Straw. Straw shall be the threshed plant residue of oats, wheat, barley, rye, or rice from which the grain has been removed. Average length shall be 6 inches if anchored by asphalt or netting or 10 inches if anchored mechanically.

(c) Stalks. Stalks shall be the whole or shredded stems of corn, cane, sorghum, flax, sunflowers, potato vines, or other coarse stemmy material.

(d) Manure. Manure shall be fresh or partially decomposed strawy stable manure containing not over 25 percent of solid material by volume.

(e) Hay Mulch Containing Seed. Hay mulch shall be mature hay containing viable seed of native grasses or other desirable species stated in the special provisions or as approved by the ENGINEER. The hay shall be cut and handled so as to preserve the maximum quantity of viable seed. Hay mulch which cannot be hauled and spread immediately after cutting shall be placed in weather-resistant stacks or baled and stored in a dry location until used.

(f) Manufactured Mulch. Cellulose-fiber or wood pulp mulch shall be products commercially available for use in spray applications. Wood cellulose fiber mulch shall consist of wood cellulose fiber pulp and fiber coatings which shall contain no germination or growth in inhibiting factors. This mulch shall be free of contamination from noxious weed seed, seed from other competitive plants, mold, or fungus. It shall be dyed an appropriate color to allow visual metering of its application, and shall have

the property of becoming dispersed and suspended when agitated in water. When sprayed uniformly on the surface of the soil, the fibers shall form a blotter-like ground cover that readily absorbs water and allows infiltration to the underlying soil.

Weight specifications from suppliers, and for all applications, shall refer only to air-dry weight of the fiber, a standard equivalent to 10 percent moisture. Each package of the cellulose fiber shall be marked by the manufacturer to show the air dry weight content. Suppliers shall certify, upon request of the ENGINEER, that laboratory and field testing of their product has been accomplished and that it meets the foregoing requirements and intent. Sampling and testing for moisture content will be in accordance with ASTM D2016, Over-Drying Method.

(g) Asphalt Binder. Asphalt binder material shall conform to the requirements of ASTM D977, Type SS-1 or RS-1, as appropriate.

(h) Mulch Blanket.

1. The excelsior blanket shall consist of a machine-produced mat of curled wood excelsior of 80 percent 6-inch or longer fiber length with consistent thickness and the fiber evenly distributed over the entire area of the blanket. The top side of each blanket shall be covered with a 2-inch by 1-inch biodegradable mesh. The blanket shall be smolder resistant. The blanket shall be secured to the ground with wire staples .091-inch diameter or greater. Staples will be "U" shaped with legs 6 inches in length with a 1-inch crown.

   The excelsior erosion blankets will be equivalent to the "Curlex" (trademark) blanket manufactured by the American Excelsior Company, Arlington, Texas.

2. Paper fabric blanket shall consist of a knitted construction of yarn interwoven with strips of biodegradable paper as manufactured by Gulf States Paper Corporation or approved equivalent. The paper strips and yarn shall degrade without residue. Staples shall be high carbon iron 6 inches to 12 inches long. Paper fabric shall be 0.05 to 0.30 pounds per square yard (±10%) per manufacturer's recommendation for fabric degradation timing to produce grass stand specified.

(i) Mulch Net. Mulch net shall consist of a biodegradable net made from extruded oriented polypropylene as manufactured by American Excelsior Company or approved equivalent. Mulch netting shall be stranded with approximately 5/8-inch by 3/4-inch mesh opening (maximum 1½ inches by 3 inches) to hold loose straw, hay, bark, wood chips, and other loose mulches in place.

(j) Hydro-mulch. Mulch to be used shall consist of a wood cellulose fiber that has not been treated with any germination or growth inhibitive substances. The mulch shall be treated with a tack and fiber to enhance seed and mulch placement and adherence to the soil. The mulch shall be free of contamination from noxious weed seed and seed from competitive plants.

1204-2.2 INSPECTION. Within 5 days after acceptance of the bid, the ENGINEER shall be notified of sources and quantities of mulch materials available, and the CONTRACTOR shall furnish the ENGINEER with representative samples of the materials to be used. These samples may be used as standards with the approval of the ENGINEER, and any materials brought on the site which do not meet these standards shall be rejected.

1204-3 CONSTRUCTION REQUIREMENTS

1204-3.1 MULCHING. Before spreading mulch, all large clods, stumps, stones, brush, roots, and other foreign material shall be removed from the area to be mulched. Mulch shall be applied immediately after seeding or within 24 hours. The spreading of the mulch may be by hand methods, blower, or other mechanical methods, provided a uniform covering is obtained. When spread by hand, the bales of hay must be torn apart, "fluffed up," and spread uniformly over the area. Mulches shall not be applied when velocities exceed 15 miles per hour. If excessive breakage of mulch occurs during spreading or anchoring, mulch shall be "wet down" with sprinkler or other suitable means.

Straw or hay shall be spread over the surface to form a uniform thickness to provide a loose depth of not less than 1½ inches nor more than 3 inches. Other organic material shall be spread at the rate directed by the ENGINEER. Mulch may be blown on the slopes, and the use of cutters in the equipment for this purpose will be permitted to the extent that at least 95 percent of the mulch in place on the slope shall be 6 inches or more in length. When mulches applied by the blowing method are cut, the loose depth in place shall not be less than 1 inch nor more than 2 inches.

TABLE OF MULCH APPLICATION RATES

Mulch	Anchoring Method	Rate (lbs/acre)	Rate of Asphalt Emulsion Track Gal/Acre
Native or Tame Hay	Mulch Tiller	3000-4000*	-
Native or Tame Hay	Asphalt or Resin Emulsion	3000	300
Small Grain Straw	Mulch Tiller	4000-5000*	-
Small Grain Straw, Flax	Asphalt or Resin Emulsion	3000	300
Flax	Mulch Tiller	3000-5000*	-
Manure	None	30,000-40,000	-

Manure	Disk	60,000-80,000	-
Wood Cellulose Fiber	Hydraulic Spray Equipment	1500-2000	-
Hydro	Spray Equipment	2000	-

*Other methods as hand anchorage, netting, and peg and string method use 3,000 lbs/acre.

1204-3.2 SECURING MULCH. The mulch shall be held in place by light disking, a very thin covering of topsoil, small brush, pins, stakes, wire mesh, asphalt binder, or other adhesive material approved by the ENGINEER. Where mulches have been secured by either of the asphalt binder methods, it will not be permissible to walk on the slopes after the binder has been applied. The CONTRACTOR is warned that in the application of asphalt binder material, he must take every precaution to guard against damaging or disfiguring structures or property on or adjacent to the areas worked and that he will be held responsible for any such damage resulting from his operations.

(a) If the "peg and string" method is used, the mulch shall be secured by the use of stakes or wire pins driven into the ground on 5-foot centers or less. Binder twine shall be strung between adjacent stakes in straight lines and crisscrossed diagonally over the mulch, after which the stakes shall be firmly driven nearly flush to the ground to draw the twine down tight onto the mulch.

(b) Mulch Nettings - Staple paper, cotton, or plastic netting to the soil surface according to manufacturer's recommendations.

(c) Hand Anchorage - With a square pointed spade, punch mulch into the surface soil in contour rows 12 inches apart.

(d) Mechanical Mulch Anchoring or Crimping -

1. Tools - Use a heavy, straight coulter type mulch tiller (Imco). The coulters should be 1/4-inch thick and be of sufficient diameter to prevent the frame from dragging the mulch. The edges should be dull so as not to cut the mulch during the anchoring operation. The edges may be serrated or smooth; if serrated, the scallops should not be more than 3 inches in length and 3/4 inch in depth. The rows or furrows made by the mulch tiller shall be spaced 6 to 12 inches apart. Penetration depth should be 2 to 3 inches. The mulch should not be covered with excessive amounts of soil. Limit to no more than 2 passes by the mulch tiller. All mulching operations will be done on the approximate contour.

2. Site Preparation - When using a mulch anchoring tool, the seed bed must be loosened to a minimum depth of 3 inches prior to placing and anchoring mulch material. This is necessary for the 2- or 3-inch preparation required for mulch

anchorage. (Drill or seeding equipment used at this time must be equipped with depth bands as the ability to obtain a firm seed bed is improbable.)

(e) Asphalt Emulsion Mulch Tack - Asphalt emulsion shall be continuously applied with an emulsion spray system equipment with a mechanical mulch hay blower. Application temperature shall be 50°F or greater (air temperature). The asphalt shall be applied with a mechanical mulch blower equipped with an emulsion sprayer system having a heating unit.

(f) Resin Emulsion Mulch Tack - The resin shall be applied with a mechanical mulch blower equipped with an emulsion spray system having a heating unit.

(g) Wood cellulose fiber mulch shall be applied with hydraulic spray equipment at the rate of 1,500 to 2,000 pounds per acre. The fiber shall be added to the water slurry in a hydraulic seeder along with the proportionate quantities of seed, fertilizer, and other approved materials. All ingredients shall be mixed to form a homogeneous slurry. Using the color of the mulch material as a metering agent, one shall uniformly spray the slurry mixture on the prepared seed bed.

A non-toxic, organic soil stabilizer may be included or added to the wood cellulose fiber where there is a high probability of wind or water erosion. Application rates of such soil stabilizers will be at the manufacturer's recommendation rates.

Since this method is basically a broadcast (surface) application of seed, the mulched area shall be kept moist by sprinkler or other means for a period of 30 days. Under conditions of extreme winds, some peeling may occur. The mulch also is subject to washing away under intense or prolonged rains. These factors should be considered in selecting this method of mulching.

(h) Mulch blankets may be primarily used to mulch small critical areas (such as ditch bottoms and slopes greater than 3:1) and shall be applied in accordance with the manufacturer's recommendations. When the blanket is unrolled, the netting shall be on top and the fibers in contact with the soil over the entire area. In channels, the blankets shall be applied in the direction of the flow of water. On slopes, the blankets shall be applied across the slope. Ends and sides shall be butted snugly and stapled, in both instances.

The staples shall be driven vertically into the ground, spaced approximately 2 linear yards apart, on each side of the blanket, and one row in the center alternately spaced between each side. Use a common row of staples on adjoining blankets.

(i) If the "asphalt spray" method is used, all mulched surfaces shall be sprayed with asphalt binder material so that the surface has a uniform appearance. The binder shall be uniformly applied to the mulch at the rate of approximately 8 gallons per 1,000 square feet, or as directed by the ENGINEER, with a minimum of 6 gallons and a maximum of 10 gallons per 1,000 square feet depending on the type of mulch and the effectiveness of the binder securing it. Bituminous binder material may be sprayed on

the mulch's slope areas from either the top or the bottom of the slope. An approved spray nozzle shall be used. The nozzle shall be operated at a distance of not less than 4 feet from the surface of the mulch, and a uniform distribution of the bituminous material shall be required. A pump or an air compressor of adequate capacity shall be used to ensure uniform distribution of the bituminous material.

(j) If the "asphalt mix" method is used, the mulch shall be applied by blowing, and the asphalt binder material shall be sprayed into the mulch as it leaves the blower. The binder shall be uniformly applied to the mulch at the rate of approximately 8 gallons per 1,000 square feet or as directed by the ENGINEER, with a minimum of 6 gallons and a maximum of 10 gallons per 1,000 square feet depending on the type of mulch and effectiveness of the binder securing it.

(k) If the “hydromulch” method is used, the mulch shall be uniformly applied at the application rate shown and shall cover a minimum of 95 percent of the seedbed area. After application, the mulch shall permit percolation of water to the underlying soil.

1204-3.3 CARE AND REPAIR

(a) The CONTRACTOR shall care for the mulched areas until final acceptance of the project. Such care shall consist of providing protection against traffic or other use by placing warning signs as approved by the ENGINEER, and erecting any barricades that may be shown on the Plans before or immediately after mulching has been completed on the designated areas.

(b) The CONTRACTOR shall be required to repair or replace any mulching that is defective or becomes damaged until the project is finally accepted. When, in the judgment of the ENGINEER, such defects or damages are the result of poor workmanship or failure to meet the requirements of the Specifications, the cost of the necessary repairs or replacement shall be borne by the CONTRACTOR. However, once the CONTRACTOR has completed the mulching of any area in accordance with the provisions of the Specifications and to the satisfaction of the ENGINEER, no additional work at his expense will be required, but subsequent repairs and replacements deemed necessary by the ENGINEER shall be made by the CONTRACTOR and will be paid for as additional or extra work.

1204-4 MEASUREMENT AND PAYMENT

1204-4.1 MULCHING. Mulching shall be measured by the square yard (SY) and paid for at the unit price bid for "Mulching" complete, in place, and accepted by the ENGINEER.

SECTION 1205 – MANHOLES AND INLETS

1205-1 DESCRIPTION

These items shall consist of the construction or installation of manholes and inlets, in accordance with these specifications, at the specified locations and Standard Details and conforming to the lines, grades, and dimensions shown on the plans or required by the ENGINEER.

1205-2 MATERIALS

1205-2.1 CONCRETE. Plain and reinforced concrete used in this work shall conform to the requirements of Section 501 "Portland Cement Concrete Pavement."

1205-2.2 MORTAR. Mortar shall be a compound of 1 portland cement to 2 parts of sand by volume to which lime may be added not to exceed 10 percent of the cement by weight.

1205-2.3 PRECAST REINFORCED CONCRETE PIPE MANHOLE. Precast reinforced concrete manhole risers and top sections shall conform to ASTM C478.

All barrel-to-barrel joints shall be sealed using a P2 gasketed joint for 48-inch manholes, a CX-4 joint for all other sizes of manholes, and an exterior seal by Press-Seal Gasket Corporation EZ Wrap and EZ Stik No. 4 primer, for all sizes of manholes, or approved equivalent. The height of the manhole shall be shown on the plans, and the diameter shall be 48 inches minimum or larger if recommended by the manhole fabricator and approved by the ENGINEER.

Steps shall not be placed in sanitary sewer, storm sewer, or air release manholes or inlets unless specified. If specified, the manhole steps to be furnished and installed shall be rubber-coated over steel reinforcing of the type manufactured by the Delta Products (Delta-Surefoot Company), or approved equivalent.

1205-2.4 PRECAST REINFORCED CONCRETE PIPE MANHOLE WITH MONOLITHIC BASE. Precast reinforced concrete risers and top sections shall conform to ASTM C478. Manhole bases shall extend a minimum of 6 inches past the exterior manhole wall, except bases below M.S.L. elevation 1626 (NGVD29), which shall extend 12 inches past the exterior manhole wall. The base and the bottom section shall be cast monolithically with precast flow lines. The pipe connections to the manhole shall be Press-Seal Gasket Corporation Model PSX-Boot, or approved equivalent. All barrel-to-barrel joints shall be sealed using a P2 gasketed joint for 48-inch manholes, a CX-4 joint for all other sizes of manholes, and an exterior seal by Press-Seal Gasket Corporation EZ Wrap and EZ Stik No. 4 primer, Infi-Shield External Gator Wrap for all sizes of manholes, or approved equivalent. All barrel sections below M.S.L. elevation 1626 (NGVD29) shall be restrained using three outside pipe joint ties equally spaced or approved equivalent. The height of the manhole shall be shown on the Plans, and the

diameter shall be 48 inches minimum or larger if recommended by the manhole fabricator and approved by the ENGINEER.

Steps shall not be placed in sanitary sewer, storm sewer, or air release manholes or inlets unless specified. If specified, the manhole steps to be furnished and installed shall be rubber-coated over steel reinforcing of the type manufactured by the Delta Products (Delta-Surefoot Company), or approved equivalent.

1205-2.5 MANHOLE CASTINGS

(a) Sanitary Sewer, Storm Sewer, and Water Main Manhole Castings. Manhole frames and covers shall be of the type manufactured by the Neenah Foundry Company Number R-1733, East Jordan Iron Works Number 1205, or Municipal Castings, Inc. Number 301 with concealed pick holes and self-sealing platen lid, or approved equivalent.

(b) Sanitary Sewer, Storm Sewer, and Water Main Floating Manhole Castings. Floating manhole frames and covers shall be of the type manufactured by Neenah Foundry Company Number R-1955-1 or East Jordan Iron Works Number 3025 with concealed pick holes and self-sealing platen lid, or approved equivalent. See Standard Details 1206-3 and 1206-4.

1205-2.6 INLET CASTINGS. Inlet castings shall be of the type manufactured by Neenah Foundry Company with Type V Grates and NDDOT Style Backs, East Jordan Iron Works with M6 Type Grate and Type T2 Back for Type 24-inch and with type M4 Grate and Type T5 Back for Type 36-inch or larger, or approved equivalent. All bolts to be temper finish, double heat-treated 1038 S.A.E., Grade 5, Cad-Dichromate plated.

(a) Type 24" Castings. Type 24-Inch Castings shall be Neenah Foundry Number R-3030, East Jordan Iron Works Number 7010 with round base, or approved equivalent.

(b) Type 36" Castings. Type 36-Inch Inlet Castings shall be a Neenah Foundry Number R-3067, East Jordan Iron Works Number 7030, or approved equivalent.

(c) Type 72" Castings. Type 72-Inch Castings shall be Neenah Foundry Number R-3295-2, East Jordan Iron Works Number 7031, or approved equivalent.

(d) Type 108" or Larger Castings. Type 108-Inch or Larger Castings shall be Neenah Foundry Number R-3295-3, or East Jordan Iron Works Number 7032 with additional inner sections, or approved equivalent.

(e) Catch Basin Castings. Catch Basin Castings shall be Neenah Foundry Number R-2573 with concave grate, or approved equivalent.

1205-2.7 SLOTTED DRAIN INLET. Slotted drain inlets shall be of a quality equal to the type manufactured by Contech Construction Products with the modified hugger

band under the minimum requirements in design, material, and workmanship conforming to the latest standards of AASHTO M36 and AASHTO M111.

1205-2.8 REINFORCING STEEL. Reinforcing steel used in this work shall conform to Subsection 501-2.10.

1205-2.9 AIR RELEASE VALVE. All air release valve taps, made into all sizes and classes of PVC and ductile iron water mains, shall be reinforced with a tapping saddle. Tapping saddles shall be a minimum of 2-bolt stainless steel skirted or complete gasket type. An O-ring single bolt stainless steel saddle is not acceptable. The automatic air release valve shall be a 1-inch APCO No. 200 or Valmatic Model 38 for water and APCO No. 400 or Valmatic Model 48 for sewer, or approved equivalent. The corporation stop shall be a Mueller No. H-15000 for copper water pipe, or approved equivalent. See Standard Detail 1205-11.

1205-2.10 PRECAST REINFORCED CONCRETE MANHOLE BASES. Precast reinforced concrete manhole bases shall conform to ASTM C478. The bases shall extend a minimum of 6 inches past the exterior manhole wall, except bases below M.S.L. elevation 1626 (NGVD29), which shall extend 12 inches past the exterior manhole wall. Base thickness shall be as follows: Manholes with inside diameters up to and including 48 inch – 6 inch thick, 54 inch thru 102 inch – 8 inch thick, 108 inch and 120 inch – 12 inch thick. Precast air release manhole bases shall be 2 inches thicker than the base thicknesses listed above.

1205-2.11 PRECAST REINFORCED CONCRETE MANHOLE COVERS. Precast reinforced concrete manhole covers shall conform to ASTM C478. Cover thickness shall be as follows: Manholes with inside diameters up to and including 48 inch – 6 inch thick, 54 inch thru 102 inch- 8 inch thick, and 108 inch and 120 inch – 12 inch thick.

1205-3 CONSTRUCTION REQUIREMENTS.

1205-3.1 EXCAVATION. Excavation for catch basins, manholes, inlets, and pipe junctions shall be done in a manner to provide adequate room for the construction of the item according to details shown on the plans. When necessary the excavation shall be adequately shored or sheeted to ensure safe and satisfactory construction and backfilling.

1205-3.2 PRECAST REINFORCED CONCRETE PIPE MANHOLES AND INLETS. Unless otherwise specified, standard reinforced concrete sewer pipe shall be used for this purpose. When this type of construction is used, the bottom precast section shall be set in a full mortar bed, and the joints between sections and around pipes shall be filled with mortar.

1205-3.3 CONCRETE CONSTRUCTION (CAST IN PLACE). The composition, consistency, placing, form work, curing, and protection of the concrete shall conform to the plans. No finishing of the concrete will be required except the filling of honeycombed areas.

1205-3.4 CONCRETE BASE. The bottoms of all manholes and inlets shall be of concrete. The thickness and other dimensions of the base shall be as specified on the plans. The invert channel shall be the true shape of the lower half of the pipe or sewer. Pipe or tile placed in concrete for inlet or outlet connections shall extend through the walls a sufficient distance to allow for connections, and the concrete shall be carefully constructed around them so as to prevent leakage along their outer surface. The inside ends shall be flush with the inside walls, and the pipe shall be of the same size and kind as those with which they connect on the outside.

1205-3.5 CASTINGS. All manhole, inlet, and catch basin castings shall be placed with a minimum of 1/2 inch of grout between the manhole inlet or catch basin, but not adjusted to grade unless specified on the plans. Total allowance for adjustment shall be from 0 to 6 inches. Castings requiring adjustment to grade shall be paid for under Section 1206 "Castings and Adjustment." All inlet castings shall be placed on the inlet facing the roadway with bolts, washers, and nuts installed in accordance with Standard Detail 1206-1. All inlet castings shall be placed on the inlet facing the roadway with bolts, washers, and nuts installed in accordance with Standard Detail 1206-1.

1205-3.6 SLOTTED DRAIN INLET. Slotted drain inlets shall be constructed in compliance with Standard Details 1205-9 and 1205-10. The CONTRACTOR shall furnish all equipment, labor, and materials, including the connection to the inlet or manhole, flowable fill for bedding and curb and gutter, all of which shall be considered incidental to the price for slotted drain.

1205-3.7 BACKFILL. Backfill shall be deposited in horizontal layers not over 6 inches in depth (loose) and each layer compacted, this process being repeated to the elevation of the finished grade as designated on the plans. Compaction shall be secured by watering each layer if dry (the water content of the material used shall not exceed the optimum moisture content) and tamping with approved mechanical rammers. The backfill shall be compacted to a density equal to the requirements specified for the pipe trench common to the manhole or inlet.

1205-3.8 CLEANING. All manholes and inlets shall be thoroughly cleaned of any accumulation of silt, debris, or foreign matter of any kind, and shall be free from such accumulations at the time of the final inspection.

1205-3.9 MARKING MANHOLES AND INLETS. The CONTRACTOR will be required to furnish and install a "Tee" or "U" steel fence post having a minimum length of 5½ feet located 1 foot from the edge of the casting on a line perpendicular to the face of the curb.

The cost of the steel fence post and installation shall be considered incidental to other bid items.

1205-3.10 POLYVINYL CHLORIDE PIPE TO MANHOLE ADAPTERS. All connections shall be made using manhole connector (rubber boot) or a PVC to MH

adapter (sand collar) in the wall of any manhole connected to PVC sewer pipe. Manhole connectors shall be PSX Press Boot as manufactured by Press-Seal Gasket Corporation, or approved equivalent, and shall be connected with 2 pipe bands.

The cost of the PVC manhole adaptor and the installation shall be considered incidental to the bid item for "Concrete Manhole."

1205-3.11 INLET STAKES. Section 100, Subsection 116, shall be strictly followed. The same line and grade stakes set by the ENGINEER for the construction of each inlet shall be saved and used by the CONTRACTOR to set the inlet castings to line and grade.

1205-4 MEASUREMENT AND PAYMENT

1205-4.1 CONCRETE MANHOLE. Concrete Manhole, including casting, shall be measured on an individual unit basis (EA) and paid for at the unit price bid for "Concrete Manhole" complete, in place, and accepted by the ENGINEER.

1205-4.2 CONCRETE MANHOLE WITH MONOLITHIC BASE. Concrete Manholes with Monolithic Base, including casting, shall be measured on an individual basis (EA) and paid for at the unit price bid for "Concrete Manhole With Monolithic Base" complete, in place, and accepted by the ENGINEER.

1205-4.3 CONCRETE DROP MANHOLE. Concrete Drop Manhole, including casting, shall be measured on an individual unit basis (EA) and paid for at the unit price bid for "Concrete Drop Manhole" complete, in place, and accepted by the ENGINEER. This item to include all items shown on Standard Detail 1205-2.

1205-4.4 AIR RELEASE VALVE AND MANHOLE. Air Release Valve and Manhole, including casting, shall be measured as a complete unit on an individual unit basis (EA) and paid for at the unit price bid for "Air Release Valve and Manhole" complete, in place, and accepted by the ENGINEER. This item to include all items shown on Standard Detail 1205-11.

1205-4.5 TYPE 24" INLET. Type 24" Inlet, including casting, shall be measured on an individual unit basis (EA) and paid for at the unit price bid for "Type 24" Inlet" complete, in place, and accepted by the ENGINEER. This item to include all items shown on Standard Detail 1205-5.

1205-4.6 TYPE 24” INLET/MANHOLE. Type 24-Inch Inlet/Manhole, including casting, shall be measured on an individual unit basis (EA) and be paid for at the unit price bid for "Type 24” Inlet/Manhole" complete, in place, and accepted by the ENGINEER. This item to include all items shown on Standard Detail 1205-5.

1205-4.7 TYPE 36” INLET. Type 36-Inch Inlet, including casting, shall be measured on an individual unit basis (EA) and paid for at the unit price bid for "Type 36” Inlet"

complete, in place, and accepted by the ENGINEER. This item to include all items shown on Standard Detail 1205-6 and 1205-7.

1205-4.8 TYPE 72-Inch INLET. Type 72” Inlet, including casting, shall be measured on an individual unit basis (EA) and paid for at the unit price bid for "Type 72” Inlet" complete in place and accepted by the ENGINEER. This item to include all items shown on Standard Detail 1205-6 and 1205-7.

1205-4.9 TYPE 108” OR LARGER INLET. Type 108-Inch or Larger Inlet, including casting, shall be measured on an individual unit basis (EA) and paid for at the unit price bid for "Type 108” or Larger Inlet" complete, in place, and accepted by the ENGINEER.

1205-4.10 CATCH BASIN. Catch Basins including castings shall be measured on an individual unit basis (EA) and paid for at the unit price bid for "Catch Basin" complete, in place, and accepted by the ENGINEER.

1205-4.11 REMOVE EXISTING CATCH BASIN OR INLET. Remove Existing Catch Basin or Inlet shall be measured on an individual unit basis (EA) and paid for at the unit price bid for "Remove Existing Catch Basin or Inlet" complete and accepted by the ENGINEER. This item is to include removing entire concrete structure and backfilling excavation with bedding material. The casting shall be taken to the salvage yard at the City of Bismarck Department of Public Works at 601 South 26th Street.

1205-4.12 THRU 4.18 (X)” SLOTTED DRAIN. (X)-Inch Slotted Drain shall be measured by the linear foot (LF) basis for "(X)” Slotted Drain" complete, in place, and accepted by the ENGINEER. This item to include all items shown on Standard Detail, 1205-9 and 1205-10.

SECTION 1206 – CASTING AND ADJUSTMENT

1206-1 DESCRIPTION

This item shall consist of furnishing and adjusting new castings on existing manholes in accordance with this section, the details and plans at the locations indicated on the plans, or as directed by the ENGINEER. This item includes adjusting new castings installed within the same project.

This item shall include the resetting of manhole frames and covers, inlet frames and covers, City water works valve boxes, or other accessories requiring adjustment to new lines and grades where such accessories are public property. Unless otherwise indicated on the plans, adjustments, replacements, and repairs to private property shall be exempt from this item.

This item shall include the furnishing of new castings, grating, I & I barriers, or covers specifically indicated on the plans. The CONTRACTOR, however, will be required to replace, at its own expense, any damaged parts resulting from its operations.

1206-2 MATERIALS

1206-2.1 Materials shall conform to Subsection 1205-2.

1206-2.2 Flexible foam expansion joint materials shall meet the requirements of ASTM D5249, TYPE 2, ASTM D1752, Sections 5.1 through 5.4 with the compression required modified to 10 psi and 25 psi maximum. This material shall be non-gassing and shall be compatible with hot pour joint sealants.

1206-3 CONSTRUCTION REQUIREMENTS

1206-3.1 GENERAL. The methods of construction shall conform insofar as applicable to the requirements of Section 1205.

Existing manholes, inlets, and valve boxes shall be adjusted to the elevation, grade, or dimensions as indicated on the plans and standard details, or as ordered by the ENGINEER. The structures are assumed to be clean prior to the beginning of the adjustment construction unless otherwise agreed to by the CONTRACTOR and the ENGINEER. Castings shall be carefully removed and reinstalled by the CONTRACTOR as indicated. If the height of a rectangular casting is to be increased, the addition may be of solid concrete block or concrete as specified in Section 501. Solid concrete block shall not be used to increase the height of circular castings. In the event the top part of the existing structure is weak and faulty, it shall be replaced as directed by the ENGINEER and the extension completed. Where the casting, grating, I & I barrier, or cover is to be lowered, the masonry or concrete shall be removed to sufficient depth so that a seat of proper dimensions may be reconstructed to receive the casting, grating, I & I barrier, or cover at the new grade. Castings shall be set in full mortar beds or otherwise secured as shown on the plans. Mortar shall be in accordance with

Subsection 1205-2.2. Casting shall be set accurately to correct elevation and line so that no subsequent adjustment will be necessary. If necessary, the CONTRACTOR shall use tapered or sloped adjusting risers.

Upon completion of the adjustment, all surplus material shall be removed, and the structure and the site of the work shall be left in a neat and clean condition. The entire structure shall be thoroughly cleaned of any accumulation of silt, debris, or foreign matter of any kind and shall be free from such accumulations at the time of final inspection.

1206-3.2 WATER STOP BOX EXTENSION. Water service stop boxes are found within the area of construction very frequently. Adjustments in elevation that can be accomplished within the range of the adjustment sleeve of the stop box shall be considered incidental to the contract bid items. The CONTRACTOR is required to use due care in making these adjustments.

If the stop box cannot be extended to the proper grade within the above limits, it shall be adjusted by removing the lid and adding the required length and diameter of standard weight pipe with a standard pipe coupling and replacing the lid. The adjustment shall be paid under Bid Item ”Water Stop Box Extension”.

1206-3.3 WRAPPED UTILITY BOXES. Utility structures, excluding manholes, encased in concrete sidewalks and pavements, shall be wrapped with a flexible foam expansion joint. Wrapped structures include valve boxes, hydrants, curb stop boxes, street light poles and foundations, traffic signal foundations, pedestrian signal pole foundations, and street signs.

Minimum thickness of the flexible joint will be 1/2 inch used on curb stop boxes, hydrants, street signs, pedestrian signal foundations, and valve boxes. Minimum thickness for larger structures shall be 3/4 inch to 1 inch maximum. Wrapped utility boxes shall be considered incidental.

1206-3.4 CASTING ADJUSTMENTS. All new and existing manholes located in concrete pavement surfaces shall have floating manhole castings installed as shown in standard details 1206-3 and 1206-4. The casting shall be installed as shown on the detail.

1206-3.5 ADJUSTING MANHOLE CASTING WITH RING AND I/I BARRIER. All newly installed manholes requiring adjustment under this bid item shall use the precast concrete adjusting rings with the AP/M PERMAFORM I/I BARRIER as manufactured by Strike Products, or approved equivalent, installed and field tested according to the manufacturers’ specifications. This item shall be paid for under Section 1206 “Castings and Adjustment.” All inlet castings shall be placed on the inlet facing the roadway with bolts, washers, and nuts installed in accordance with Standard Detail 1206-1.

The I/I Barrier shall have a watertight seal to the top of manhole barrel using butyl sealant, or approved equivalent, as specified by the manufacturer of the I/I Barrier. The

top of manhole barrel shall be free of dust and debris before applying the sealant and the I/I Barrier. Sufficient quantity of sealant must be used to accommodate flaws in the top of manhole barrel.

If deemed necessary by the ENGINEER, to check the seal of the I/I Barrier, the excavated area around the I/I Barrier shall be filled with water to a level above the joint between the I/I Barrier and the top of manhole barrel. If any leakage or moisture is present in the area inside the manhole around the seal, the CONTRACTOR shall remove the I/I Barrier and reseal at no additional cost.

The bottom ring placed on the I/I Barrier shall not be sealed to the I/I Barrier to allow infiltrated water to escape. All successive rings above the bottom ring shall be sealed together per manufacturer's recommendations. The I/I Barrier shall extend a minimum of 2 inches above the top ring. If a floating manhole casting is used, the I/I Barrier extending above the top ring shall be trimmed so that the I/I Barrier does not interfere with the manhole casting's ability to function. All pressure-reducing valve and air release valve manholes shall include a Cap 'N Seal as manufactured by Strike Products.

All existing manholes outside the roadway surface that require adjustment shall be paid for under Section 1206-4.17 "Adjust Manhole Casting in Unpaved Area." All existing manholes outside the roadway surface that require a new manhole casting shall have standard castings and shall be paid for under Section 1206-4.18 "Furnish and Adjust Manhole Casting in Unpaved Area."

1206-4 MEASUREMENT AND PAYMENT

1206-4.1 ADJUST MANHOLE CASTING IN ASPHALT PAVEMENT. This item shall be measured on an individual unit basis (EA) and paid for at the unit price bid for "Adj Manhole Casting-Asph Pvmt" complete as detailed and accepted by the ENGINEER.

1206-4.2 FURNISH AND ADJUST MANHOLE CASTING IN ASPHALT PAVEMENT. This item shall be measured on an individual unit basis (EA) and paid for at the unit price bid for "Furn &Adj. M.H. Cast-Asph Pvmt" complete as detailed and accepted by the ENGINEER.

1206-4.3 ADJUST TYPE 24" INLET CASTING. This item shall be measured on an individual unit basis (EA) and paid for at the unit price bid for "Adjust Type 24" Inlet Casting" complete as detailed and accepted by the ENGINEER.

1206-4.4 FURNISH AND ADJUST TYPE 24" INLET CASTING.
This item shall be measured on an individual unit basis (EA) and paid for at the unit price bid for "Furn & Adj Type 24" Inlet Cast" complete as detailed and accepted by the ENGINEER.

1206-4.5 ADJUST TYPE 36” INLET CASTING. This item shall be measured on an individual unit basis (EA) and paid for at the unit price bid for "Adjust Type 36” Inlet Casting" complete as detailed and accepted by the ENGINEER.

1206-4.6 FURNISH AND ADJUST TYPE 36” INLET CASTING. This item shall be measured on an individual unit basis (EA) and paid for at the unit price bid for " Furn & Adj Type 36” Inlet Cast" complete as detailed and accepted by the ENGINEER.

1206-4.7 ADJUST TYPE 72” INLET CASTING. This item shall be measured on an individual unit basis (EA) and paid for at the unit price bid for “Adjust Type 72” Inlet Casting" complete as detailed and accepted by the ENGINEER.

1206-4.8 FURNISH AND ADJUST TYPE 72” INLET CASTING. This item shall be measured on an individual unit basis (EA) and paid for at the unit price bid for "Furn & Adj Adjust Type 72” Inlet Cast" complete as detailed and accepted by the ENGINEER.

1206-4.9 ADJUST TYPE 108” OR LARGER INLET CASTING. This item shall be measured on an individual unit basis (EA) and paid for at the unit price bid for "Adj Type 108” or LGR Inlet Casting" complete as detailed and accepted by the ENGINEER.

1206-4.10 FURNISH AND ADJUST TYPE 108” OR LARGER INLET CASTING. This item shall be measured on an individual unit basis (EA) and paid for at the unit price bid for "Furn&Adj Type 108” or LGR Inlet Cast" complete as detailed and accepted by the ENGINEER.

1206-4.11 ADJUST VALVE BOX IN ASPHALT PAVEMENT. This item shall be measured on an individual unit basis (EA) and paid for at the unit price bid for "Adjust Valve Box-Asph Pvmt" complete as detailed and accepted by the ENGINEER.

Valve boxes contracted under this bid item which are located outside of concrete or paved areas, such as in street boulevards, shall be measured and paid for at one-half the unit price bid for "Adjust Valve Box-Asph Pvmt"

1206-4.12 WATER STOP BOX EXTENSION. This item shall be measured on an individual basis (EA) and paid for at the unit price bid for "Water Stop Box Extension" complete, in place and accepted by the ENGINEER.

1206-4.13 WRAPPED UTILITY BOXES. This item shall be measured and paid at the unit price bid per each (EA) “Wrapped Utility Box” complete, in place, as detailed and accepted by the ENGINEER.

1206-4.14 ADJUST VALVE BOX IN CONCRETE. This item shall be measured on an individual basis (EA) and paid for at the unit price bid for “Adjust Valve Box in Concrete” complete as detailed and accepted by the ENGINEER.

Valve boxes contracted under this bid item which are located outside of concrete or paved areas, such as in street boulevards, shall be measured and paid for at one-half the unit price bid for “Adjust Valve Box In Concrete.”

1206-4.15 ADJUST MANHOLE CASTING IN CONCRETE. This item shall be measured on an individual unit basis (EA) and paid for at the unit price bid for “Adjust MH Casting-Concrete” complete as detailed and accepted by the ENGINEER.

1206-4.16 FURNISH AND ADJUST MANHOLE CASTING IN CONCRETE. This item shall be measured on an individual unit basis (EA) and paid for at the unit price bid for “Furn & Adj MH Cast-Concrete” complete as detailed and accepted by the ENGINEER.

1206-4.17 ADJUST MANHOLE CASTING IN UNPAVED AREA. This item shall be measured on an individual unit basis (EA) and paid for at the unit price bid for “M.H. Casting-Unpaved Area” complete as detailed and accepted by the ENGINEER.

1206-4.18 FURNISH AND ADJUST MANHOLE CASTING IN UNPAVED AREA. This item shall be measured on an individual unit basis (EA) and paid for at the unit price bid for “Furn & Adj MH Cast-Unpaved Area” complete as detailed and accepted by the ENGINEER.

1206-4.19 ADJUST VALVE BOX IN UNPAVED AREA. This item shall be measured on an individual unit basis (EA) and paid for at the unit price bid for “Adj Valve Box-Unpaved Area” complete as detailed and accepted by the ENGINEER.

SECTION 1207 – GEOSYNTHETICS

1207-1 DESCRIPTION

Geosynthetics shall consist of geogrids or geotextile fabrics.

The work shall consist of furnishing and installing geosynthetic materials at the locations and dimensions shown in the contract documents, or as directed by the ENGINEER.

1207-2 MATERIAL

1207-2.1 GENERAL. Package, label, identify, handle, and store geosynthetic according to ASTM D4873. Each geosynthetic roll shall be wrapped with a material that will protect the roll, including the ends of the rolls, from any damage due to shipment, water, sunlight, and contaminants. Protective wrapping shall be maintained during periods of shipment and storage.

Certificate of compliance shall be submitted and approved by the ENGINEER prior to any placement of the geosynthetic material.

1207-2.2 GEOGRID. Geogrid shall be a geosynthetic material formed by a regular network of integrally connected elements with apertures of sufficient size to allow interlocking with surrounding soil, stone, or other geotechnical material to function primarily as reinforcement.

Geogrid shall be dimensionally stable and able to retain its geometry under manufacture, transport, and installation stresses.

The CONTRACTOR shall submit data sheet, product sample approximately 4 inches by 7 inches or larger, and certification from the manufacturer that the geogrid product supplied meets the following requirements. The CONTRACTOR shall submit manufacturer's installation instructions and general recommendations. The manufacturer's certificate shall certify that the furnished geogrid meets minimum average roll values (MARV) based on test data from an independent testing laboratory. All geogrids supplied shall be clearly labeled as meeting all specified minimum values and as being from the same production run.

Geogrid Properties	Test Method	Geogrid
Ultimate Tensile Strength[1],	ASTM D 6637	1,000
Tensile Strength[1], 2% strain,	ASTM D 6637	400
Tensile Strength[1], 5% strain,	ASTM D 6637	800
Junction Strength, lb, min	GRI[2] GG2	25
UV Resistance (after 500 hrs), % Strength Retained	ASTM D 4355	70
Aperture Size, inch	Direct	0.5 – 1.5
[1]Strength values represents weakest principal direction [2]Geosynthetic Research Institute.		

1207-2.3 GEOTEXTILE FABRIC. Geotextile fabric shall be a fabric consisting of polymeric filament or yarns such as polypropylene, polyethylene, polyester, polyamide, or polyvinylidene chloride. The filaments or yarns shall be formed into a stable network so they retain their relative position to each other. The CONTRACTOR shall submit data sheet, product sample approximately 4 inches by 7 inches or larger, and certification from the manufacturer that the fabric product supplied meets the following requirements. The CONTRACTOR shall submit Manufacturer's installation instructions and general recommendations. The geotextile shall be inert to commonly encountered chemicals and meet the properties in the following table:

Fabric Properties	Test Method	Separation	Underdrain	RipRap	Reinforcement
Ultimate Grab Strength[1], lbs, min	ASTM D 4632	180	180	200	350
Ultimate Grab Elongation[1], %	ASTM D 4632	N/A	N/A	15 (min)	25 (max)
Trapezoid Tearing Strength, lbs, min (any direction)	ASTM D 4533	50	50	50	100
Static Puncture Strength, lbs, min	ASTM D 6241	405	435	435	1000
AOS less than mm, (greater than US STD. Sieve)	ASTM D 4751	0.212 (70)	0.3 (50)	0.3 (50)	0.6 (30)
Permittivity, sec^{-1}, min	ASTM D 4491	0.1	0.5	0.2	0.05
UV Resistance (after 500 hrs) % min Strength Retained	ASTM D 4355	70	70	70	70
Sewn-Seam Strength, lbs	ASTM D 4632	160	160	180	310
[1]Strength values represents weakest principal direction					

1207-3 CONSTRUCTION REQUIREMENTS

1207-3.1 GENERAL. The CONTRACTOR shall furnish all labor, materials, and equipment necessary for completion of all work as shown on the plans and specified herein. All work shall be subject to the inspection and approval of the ENGINEER. A representative of the geosynthetic material manufacturer shall be available to be on site to provide technical assistance as required by the CONTRACTOR or ENGINEER.

The CONTRACTOR shall prepare the surface as indicated on the plans or as directed by the ENGINEER. The surface receiving the geosynthetic material shall be smooth

and free of stones, sticks, and other debris or irregularities that might puncture or tear the geosynthetic material. The geosynthetic material shall be installed in accordance with the lines and grades as shown on the plans. The geosynthetic material shall be placed free of wrinkles and shall be protected at all times during construction. Construction equipment shall not be operated on the geosynthetic material.

1207-3.2 GEOGRID. Longitudinal and transverse joints shall, be overlapped a minimum of one foot or as directed by the ENGINEER or manufacturers recommendations. Overlap joints shall be secured together with plastic tires, placement of aggregate, or approved method to prevent wrinkling or movement. Aggregate placement or mechanically tied transverse joints shall be tied at 3-foot intervals and longitudinal joints at 15-foot intervals. Placement of geogrid around corners may require cutting a diagonal and lapping. Geogrid shall be pinned at the beginning of the backfill section or approved method to prevent the geogrid from moving. The beginning of each new roll shall be placed beneath the previous roll to prevent the advancing fill from lifting the geogrid. Geogrid end overlaps shall be staggered at least 10-feet from other end in adjacent rolls. Geogrid shall be kept taut at the beginning of the backfilling section but not restrained from stretching or flattening.

Torn or damaged geogrid shall be repaired at no additional cost. Repair areas shall be lapped a minimum of 3 feet in all directions. Each side of the repaired geogrid shall be mechanically tied to the existing geogrid.

1207-3.3 GEOTEXTILE FABRIC. Overlap joints shall be tied together per manufacture's recommendations or approved method. Placement of fabric around corners may require cutting a diagonal and lapping. The fabric shall be secured using pins or manufacturer's recommended methods to hold the fabric in place during the construction activities. The beginning of each new roll shall be placed beneath the previous roll to prevent the advancing fill from lifting the fabric. Fabric end overlap shall be staggered at least 10 feet from other end in adjacent rolls. Fabrics shall be kept taut at the beginning of the backfilling section but not restrained from stretching or flattening. Torn or punctured geotextile fabric shall be patched with minimum overlap of 3 feet in all directions. Patches shall be secured around the perimeter with pins. No allowances shall be made for overlap or repairs.

Fabric shall not be left uncovered for longer than 5 days. Fabric that is not covered within 5 days shall be removed and replaced at the CONTRACTOR's expense.

A. Geotextile Reinforcement Fabric. Reinforcement shall be unrolled parallel to the centerline of the road and shall be placed as shown in the plans. The fabric shall be placed such that it is taut and pinned, using a minimum of 6-inch pins, or as directed by the ENGINEER. The pins shall be placed at a nominal 15 foot spacing along all edges and at all corners, prior to placing any material on the fabric.

The fabric shall be overlapped a minimum of 2-feet at all splices or joints or as directed by the ENGINEER or manufacture's recommendations.

B. Geotextile Separation Fabric. When placing the fabric, the geotextile shall be unrolled in line with the placement of the new aggregate. The fabric shall not be dragged across the subgrade. Separation fabric shall be secured according to manufacturer's recommendations.

The fabric shall be overlapped a minimum of 2 feet at all splices or joints or as directed by the ENGINEER or manufacturer's recommendations.

C. Geotextile Underdrain Fabric. After the fabric had been secured in place per manufacturer's recommendations, the aggregate shall be deposited by methods that will not tear, puncture, or reposition the fabric. The aggregate shall not be dropped on the fabric from a height greater than 3 feet.

The fabric shall be overlapped a minimum of 1 foot at all splices or joints or as directed by the ENGINEER or manufacturer's recommendations.

D. Geotextile RipRap Fabric. When the fabric is used for scour or stream bank protection it shall be placed loosely and be unrolled in the direction of the anticipated water flow. Riprap fabric overlaps shall be pinned in place at 3-foot intervals.

The fabric shall be overlapped a minimum of 3 feet at all splices or joints or as directed by the ENGINEER or manufacturer's recommendations.

The riprap or cover material shall be deposited and spread over the fabric by methods that do not tear, puncture, or reposition the fabric. Riprap stones shall not be dropped on the fabric from a height greater than 3 feet. Stones shall not be rolled along the fabric. Placement of the stones shall begin at the base of the slope and at the center of the geotextile covered area.

1207-3.4 AGGREGATE SUBBASE PLACEMENT. Aggregate subbase shall be placed on the geosynthetic material in lifts and compacted as directed in Section 302. Aggregate shall be placed, spread, and compacted in such a manner that minimizes the development of wrinkles or movement in the geosynthetic material. Before placing aggregate material on the geosynthetic material, the CONTRACTOR shall demonstrate that the placement method will not damage the geosynthetic material. The ENGINEER may order the removal of at least 4 square yards of material to inspect for damage to the geosynthetic material. Tears or rips in the geosynthetic material shall be repaired.

A minimum loose fill aggregate thickness of 6 inches, or as directed by the ENGINEER, is required prior to the operation of tracked vehicles over the geosynthetic material. Turning of tracked vehicles shall be kept to a minimum to prevent tracks from displacing the fill and damaging the geosynthetic material. Sudden braking and sharp turning movements shall be avoided.

1207-4 MEASUREMENT AND PAYMENT

1207-4.1 GEOGRID REINFORCEMENT. Geogrid Reinforcement shall be measured by the square yard (SY) and paid for at the unit price bid for “Geogrid Reinforcement” in place and accepted by the ENGINEER. No allowance shall be made for overlaps or repairs.

1207-4.2 GEOTEXTILE REINFORCEMENT FABRIC. Geotextile reinforcement fabric shall be measured by the square yard (SY), and paid for at the unit price bid for “Geotextile Reinforcement Fabric” in place and accepted by the ENGINEER. No allowance shall be made for overlaps or repairs.

1207-4.3 GEOTEXTILE SEPARATION FABRIC. Geotextile Separation Fabric shall be measured by the square yard (SY) and paid for at the unit price bid for “Geotextile Separation Fabric” in place and accepted by the ENGINEER. No allowance shall be made for overlaps or repairs.

1207-4.4 GEOTEXTILE UNDERDRAIN FABRIC. Geotextile Underdrain Fabric shall be measured by the square yard (SY) and paid for at the unit price bid for “Geotextile Underdrain Fabric” in place and accepted by the ENGINEER. No allowance shall be made for overlaps or repairs.

1207-4.5 GEOTEXTILE RIPRAP FABRIC. Geotextile Riprap Fabric shall be measured by the square yard (SY) and paid for at the unit price bid for “Geotextile Riprap Fabric” in place and accepted by the ENGINEER. No allowance shall be made for overlaps or repairs.

SECTION 1208 – CHAIN LINK FENCING

1208-1 DESCRIPTION

This item covers the requirements for furnishing materials and constructing new chain-link fences and gates in accordance with the details included herein and as shown on the plans.

The fence shall be the product of a manufacturer who has demonstrated by actual installations of a similar nature that its product is of the type required. The CONTRACTOR shall include all supplementary parts necessary or required for a complete and satisfactory installation within the true meaning and intent of the drawings. All runs of the fence shall present the same general appearance, and the product of one manufacturer only will be accepted, except for items which do not influence the appearance of the completed fence. No used, rerolled, or open seam steel shall be permitted in posts, gate frames, rails, or braces.

1208-2 MATERIALS

1208-2.1 FABRIC. The chain-link fence fabric shall conform to AASHTO M181, Type 1. The size of mesh shall be 2 inches, and the wire shall be No. 9 gauge basic open hearth steel hot dip galvanized after weaving with a minimum of 1.20 ounces of zinc per square foot of uncoated wire surface. The wire shall have a minimum tensile strength of 80,000 psi and shall be standard finish with the top and bottom selvage knuckled.

1208-2.2 WIRE FABRIC TIES. Wire fabric ties shall be No. 9 gauge hot dip galvanized steel wire, conforming to ASTM A112, or No. 9 gauge aluminum ties, spaced 12 inches center to center on all posts and 24 inches center to center on all rails.

1208-2.3 POSTS, RAILS, AND BRACES. All posts, rails, and braces shall be hot dipped galvanized steel in accordance with AASHTO M181, Grade 2. Line and brace posts shall be 2-inch O.D., 2.75 pounds per linear foot for fabric 6 feet or less, and 2 3/8-inch O.D., 3.65 pounds per linear foot for fabric from 7 feet to 10 feet. Corner posts shall be 2 3/8-inch O.D., 3.65 pounds per linear foot for fabric 6 feet or less, and 2 7/8-inch O.D., 5.79 pounds per linear foot for fabric from 7 feet to 10 feet. Top rails and braces shall be 1 5/8-inch O.D., 2.27 pounds per linear foot for all sizes fabric. Each brace section shall be diagonally trussed with 3/8-inch round hot dip galvanized steel rod with truss tightener and fittings. All posts shall be furnished with tops and required fittings for attaching fabric and rail. Fittings shall be of malleable iron or pressed steel.

1208-2.4 MISCELLANEOUS FITTINGS AND HARDWARE. Miscellaneous fittings and hardware shall be of design standard with the manufacturer. Miscellaneous fittings and hardware shall be zinc-coated steel.

1208-2.5 WELDING. Structural members of gates which are in contact shall be fully welded by a method that will procure a continuous weld on all sides and faces of joints

at exposed edges. Surplus welding material shall be removed. All factory or field welds shall be coated with a rust preventive primer and a second coat of paint.

1208-2.6 CONCRETE. Concrete for posts shall be a 6 bag mix of approved materials.

1208-3 CONSTRUCTION REQUIREMENTS

1208-3.1 GENERAL. The fence shall be constructed in accordance with the details on the plans and as specified herein using new materials, and all work shall be performed in a workmanlike manner satisfactory to the ENGINEER. Prior to the beginning of the work or upon the request of the CONTRACTOR, the ENGINEER shall locate the position of the work by establishing and marking the property line or fence line. When directed, the CONTRACTOR shall span the opening below the fence with barbed wire fastened to stakes of the required length at locations of small drainage ditches where it is not practical to conform the fences to the general contour of the ground surface, as required. The new fence shall be permanently tied to the terminals of existing fences whenever required by the ENGINEER. The finished fence shall be plumb, taut, true to line and ground contour, and complete in every detail. When directed, the CONTRACTOR shall be required to stake down the chain link fence at several points between posts.

1208-3.2 CLEARING FENCE LINE. The site of the fence shall be sufficiently cleared of obstructions, and surface irregularities shall be graded so that the fence will conform to the general contour of the ground. The fence line shall be cleared to a minimum width of 2 feet on each side of the centerline of the fence. This clearing shall consist of the removal of all stumps, brush, rocks, trees, or other obstructions which will interfere with proper construction of the fence. Stumps within the cleared area of the fence line shall be grubbed or excavated. The bottom of the fence shall be placed a uniform distance above the ground as specified on the plans. When shown on the plans, or as directed by the ENGINEER, the existing fences which coincide with or are in a position to interfere with the new fence location shall be removed by the CONTRACTOR as a part of the construction work, unless such removal is listed as a separate item in the bid schedule. All holes remaining after post and stump removal shall be refilled with suitable soil, gravel, or other material acceptable to the ENGINEER and shall be compacted properly with tampers.

The work shall include the handling and disposal of all material cleared, excavated, or removed, regardless of the type, character, composition, or condition of such material encountered.

1208-3.3 INSTALLING POSTS. All posts shall be spaced not more than 10 feet apart as shown on the plans. Terminal (end, corner, pull, and brace) and gate posts shall be set 36 inches in concrete bases as shown on the plans. All line posts shall be set 30 inches in concrete bases as shown on the plans. CONTRACTOR may optionally choose to direct drive line end or corner posts in lieu of concreting. Line posts shall be driven to a minimum depth of 48-inches for fencing up to 8 feet in height. Corner or end posts shall be driven to a minimum depth of 60-inches for fencing up to 8 feet in height.

Pull, brace, and gate posts shall be concreted for all fencing. The top of the concrete bases shall be slightly above the ground, trowel finished, and sloped to drain away from the posts. Holes of full depth and size for the concrete bases for posts shall be dug to the size and depth as shown on the plans. All post settings shall be done carefully so that all posts shall be vertical and in true alignment and rigidly secured in position.

On terminal (end, corner, pull, and brace) and gate posts, the post tops and brace rail clamps around the posts shall be placed before setting the posts in concrete bases. In setting the gate posts, great care must be taken to make sure gate posts are set the exact distance apart as shown on the plans. For example, posts for a 6-foot gate must be set so as to leave an opening exactly 6 feet wide. A line drawn across from the top of one gate post to the other must be level, regardless of the grade at the ground line. If the ground is not level, the upgrade gate post shall be set first to get the proper height for the downgrade gate post. The concrete bases for end, corner, pull, brace, and gate posts shall be placed first and allowed to cure for 7 days. The concrete bases for line posts shall be allowed to cure for 3 days. Stretcher bar bands and truss bands as specified on the plans shall be spread and slipped on end, corner, pull, brace, and gate posts as the next operation. Post tops are then inserted on all other posts. No extra compensation shall be made for rock excavation. Rock excavation shall not be grounds for extension of time.

1208-3.4 INSTALLING TOP RAILS. To start the installation, a length of top rail shall be run through the first couple of post tops; a rail clamp shall be assembled on the end, corner, or gate post, as the case may be. The end of the rail already placed shall be butted into the clamp and fastened. The top rail shall be installed along the run of the fence and the various sections joined with sleeve couplings. At not more than every 100 feet, an expansion coupling shall be placed to take care of expansion and contraction of the rail. The rail shall be clamped in the end, corner, or gate post at the end of the run of the installation of top rail. The fence shall be constructed in such a manner that the top rail appears straight on line and grade or flows smoothly over contours and/or around curves.

1208-3.5 INSTALLING BRACES. All horizontal braces shall be attached together with truss rods at all terminal (end, corner, and pull) and gate posts to the brace posts as shown on the plans.

1208-3.6 INSTALLING FABRIC. The fabric shall be unrolled on the outside of the fence line with the bottom edge of the fabric against the posts. The various rolls shall be spliced by bringing the ends close together and weaving in a picket in such a way that it will engage both of the roll ends and catch with each twist each separate mesh of the end pickets of both rolls of fabric. The fabric shall be raised and tied loosely to the top rail with a temporary tie wire at intervals of about 20 feet. The fabric shall be installed by a method approved by the ENGINEER. One method used is given below.

> **(a)** At end, corner, or gate posts, the stretcher bar shall be slipped through the end picket of the fabric and the stretcher bar bands at the same time. Then the

bolts in the stretcher bar bands shall be tightened. Additional rolls of fabric shall be spliced and placed as the erection progresses along the fence.

(b) In the long sections, the fence shall be stretched at intervals of about 100 feet. After the stretching is complete, the fabric shall be tied to the top rails with ties securely clinched at the back of the rail. The fastenings shall be spaced not more than 24 inches on centers for the top rail.

(c) The fabric shall be attached to the line posts with ties securely clinched to the back of the line posts. The fastenings shall be spaced not more than 12 inches on centers for line posts. The topmost tie shall be placed on the line post as near the top of the fabric as possible and the lowest tie as near the bottom of the fabric as possible.

(d) At terminal (end, corner, and pull) and gate posts, the fabric shall be fastened with stretcher bars and bands. The fastenings shall be spaced not more than 12 inches on centers for terminal (end, corner, and pull) and gate posts. The topmost band shall be placed on these posts as near the top of the fabric as possible and the lowest band as near the bottom of the fabric as possible.

Standard chain link fence stretching equipment shall be provided for stretching the fabric before tying it to the rails and posts. The stretching and tying operations shall be repeated about every 100 feet until the run of fence is completed. Equipment of one type for performing the stretching operation may be composed of 4 pieces of lumber (2x4s or larger) cut into a slightly shorter length than the width of the fabric. The pieces shall be bored for 6 bolts of about 1/2-inch or 5/8-inch diameter and shall be assembled as shown on the Plans. 1 pair shall be used for stretching the fabric, and both pairs shall be used for making a closure of a run of the fence.

Before making a closure, the other end of the run shall be fastened to the end, corner, or gate post as described previously. The operation of making a closure of a run shall be as follows: The stretching equipment as described above shall be clamped on the ends of the fabric parallel to each other and about 5 feet apart when the tension is first applied. The stretching shall continue until the slack has been removed from both sections of the fabric. If the ends overlap, the fabric shall be cut to match. The ends shall be joined by the insertion of a picket similar to the method of connecting 2 rolls of fabric.

1208-3.7 INSTALLING GATES. The gates shall be hung on gate fittings as shown on the plans. Gates shall be erected to swing in the direction indicated and shall be provided with gate stops as specified or as shown on the Plans. All hardware shall be thoroughly secured, properly adjusted, and left in perfect working order. Hinges and diagonal bracing in gates shall be adjusted so that the gates will hang level. All gates shall be furnished with a closure which may be secured with a padlock.

1208-3.8 EXISTING FENCE CONNECTIONS. Wherever the new fence joins an existing fence, either at a corner or at the intersection of straight fence lines, a corner post with a brace post shall be set at the junction and braced the same as herein described for corner posts or as shown on the plans.

If the connection is made at other than the corner of the new fence, the last span of the old fence shall contain a brace span.

1208-4 MEASUREMENT AND PAYMENT

1208-4.1 thru 4.9 (SIZE)' CHAIN-LINK FENCE. Chain-Link Fence shall be measured by the linear foot (LF) from outside to outside of corner, end, or gate post and shall be paid for at the unit price bid for " (Size)' Chain-Link Fence" complete, in place, and accepted by the ENGINEER.

1208-4.10 thru 4.18 (SIZE)' CHAIN-LINK GATE. Chain-Link Gate shall be measured on an individual unit basis (EA) and shall be paid for at the unit price bid for "(Size)' Chain-Link Gate" complete, in place, and accepted by the ENGINEER.

SECTION 1209 – SANITARY SEWER AND WATER SERVICE CONNECTIONS

1209-1 DESCRIPTION

This item shall consist of furnishing and installing sanitary sewer and water service connections from the main lines located in public easements or rights-of-way, such as streets and alleys, to the right-of-way property line. The materials, equipment, and construction methods shall be in full compliance with the ordinances of the City of Bismarck, the North Dakota State Plumbing Code, regulations set forth by the North Dakota State Health Department, and in accordance with these specifications and standard details.

1209-2 MATERIALS

1209-2.1 POLYVINYL CHLORIDE SEWER PIPE. PVC sewer pipe and fittings shall conform to the requirements of ASTM D3034 for type PSM, PVC sewer pipe and fittings and shall have an SDR of 35 which shall be stamped on the pipe. Gasketed type joints on PVC pipe and fittings are preferred. Use of PVC sewer pipe joint cement must be approved by the ENGINEER prior to construction. The polyvinyl chloride sewer pipe joint cement shall consist of a viscous brushable solution of polyvinyl chloride in suitable active solvents. The cement shall be purchased from the pipe manufacturer and used in accordance with the manufacturer's instructions. It shall produce a joint of sufficient strength to permit normal installation handling within 5 minutes after jointing when exercising reasonable care.

1209-2.2 JOINT MATERIALS. Joint materials for sewer pipe shall conform to Subsections 801-2.4 through 801-2.7.

1209-2.3 COPPER WATER PIPE. Copper water pipe shall conform to ASTM B88, Type K Soft. All new copper water service pipe shall be connected using a flared connection. New copper water service pipe being connected to existing copper water service pipe may be connected using a compression type connection if approved by the ENGINEER. All water service lines up to and including 2-inch shall be Type K Soft copper between the water main and curb stop.

1209-2.4 POLYETHYLENE WATER PIPE. Polyethylene water service line of iron pipe size (IPS) shall be manufactured from ultra-high molecular weight polyethylene (average molecular weight of 1,750,000) of virgin materials and shall meet the requirements of Type III Class "C" Category 5-P34 polyethylene as defined in ASTM D1248. The pipe shall be designated UHMWPE 3408, with a design stress of 630 pounds per square inch (630 psi) and a working pressure of 150 pounds per square inch (150 psi) for water at 73.4°F. The pipe shall conform to ASTM D2239 with a standard dimension ratio (SDR) of 7. The pipe shall be permanently imprinted with the manufacturer's brand name, pipe size, identification of the National Sanitation Foundation (NSF) approval, ASTM specification, recommended working pressure, and production date code. Connection fittings shall be compression fittings (gasket type), stab fitting with O-ring seal (Mueller Insta-Tite or approved equivalent), or an insert type

fitting (Ford Pack Joint Coupling Series 66, or approved equivalent, for 1½-inch and 2-inch polyethylene only).

1209-2.5 CORPORATION STOP. Corporation stops shall be Mueller No. H-15000 or McDonald No. 74701 or Ford F600 or FB600 for copper water pipe, or approved equivalent.

1209-2.6 CURB STOP. Curb stops shall be Mueller No. B-25154, Mueller No. H-15154, Mueller No.V-25226, McDonald No. 76104 , McDonald No. 76104-22, FORD B22, Ford B66, or Ford B77, without drain, having a Minneapolis Pattern, or approved equivalent. Curb stops shall be installed using the proper tools as recommended by the manufacturer.

1209-2.7 CURB BOX. Curb boxes shall be McDonald No. 5614 or Mueller No. H-10302 (1 ½-inch diameter upper section), Mueller No. H-88703 or McDonald No. 5660, for 1¼-inch or smaller curb stops. Curb boxes shall be Mueller No. H-10304 or McDonald No. 5615 (2-inch diameter upper section) for 1½-inch or larger curb stops, or approved equivalent. Stationary rods shall not be installed with curb stop boxes. The length of the curb box extended shall be 8 feet. Curb stops shall be installed on a 6" square by 4-inch thick concrete or brick pad. All curb boxes shall be encased with 8-mil linear low-density (LLD) polyethylene film in accordance with ANSI/AWWA C105/A21.5. All encasements shall be considered incidental.

1209-2.8 CONCRETE. Concrete for pipe cradles and saddles shall conform to the requirements of Section 501.

1209-2.9 TAPPING SLEEVE WITH TAPPING VALVE. For pipe sizes 6 inches to 24 inches, the tapping sleeve shall be stainless steel with a stainless steel flange and bolts and shall conform to the "Smith Blair" Type 663 or "Romac" Type SST, or approved equivalent. For pipe sizes 24 inches or larger, the tapping sleeve shall be epoxy lined and coated with stainless steel bolts and shall conform to the "Smith Blair" Type 622 Split Sleeve with O-Ring Seal. The tapping valve shall conform to City of Bismarck Standard Specification 901-2.5 for Gate Valves.

The City of Bismarck Public Works Department will tap the water main at a charge to the CONTRACTOR. The CONTRACTOR shall be responsible for all other work connected with installation of the tapping sleeve and valve, including the necessary space around the water main required for the tapping machine and assisting the Public Works Department in positioning the tapping machine.

All corporation taps made into all sizes and classes of asbestos cement, PVC, sandcast iron, cast iron, ductile iron, and prestressed concrete water mains shall be reinforced with a tapping saddle. Tapping saddles used on PVC water main shall provide full support around the circumference of the pipe and provide a bearing area of sufficient width along the axis of the pipe 2 inches minimum, ensuring that the pipe will not be distorted when a saddle is tightened. Tapping saddles for PVC, ductile iron, cast iron, and sand cast iron water main up to 12 inches in diameter shall be one of the following:

Romac Style 306, PowerSeal Model 3412, Smith Blair Series 370, or approved equivalent. Tapping saddle for PVC, ductile iron, cast iron, and sand cast iron water main over 12 inches in diameter shall be a Romac Style 305, or approved equivalent. Tapping saddles for asbestos cement water main shall be a double strap bronze with an O-ring gasket cemented in body groove as manufactured by the Mueller Company, or approved equivalent. Tapping saddles for prestressed concrete water mains shall be approved by the ENGINEER.

Tapping saddles shall be installed according to manufacturer’s installation instructions. The tapping saddle bolts shall be torqued using a calibrated torque wrench with a handle at least 12 inches in length. The CONTRACTOR should be prepared to show certification of torque wrench calibration at the request of the ENGINEER.

1209-3 CONSTRUCTION REQUIREMENTS

Construction requirements shall conform to Subsection 801-3 for sewer service connections and Subsection 901-3 for water service connections. All pipe and fittings shall be installed in accordance with the manufacturer's recommendations unless otherwise specified herein. All copper water service lines shall be constructed "snaked" within the trench.

On new construction, for each sewer stubout, a 2-inch by 2-inch wood marker shall be placed a minimum of 1 foot from the end of the sewer stubout, shall extend vertically and plumb to not less than 2 feet above the existing surrounding ground, and painted green.

On new construction, for each water curb stop , a metal T-Post marker shall be placed a maximum of 1 foot from the curb stop box, extended vertically to a minimum of 3 feet above the existing surrounding ground, and painted blue.

The CONTRACTOR shall be responsible for maintaining the markers until the project has been accepted by the ENGINEER. The cost of the stubout markers shall be considered incidental to other bid items.

When connecting to a sewer main and a wye is not available, the connection shall be made using an Inserta Tee manufactured by Inserta Fittings Co., or approved equivalent. A factory-assembled wye may be cut in using gasketed repair couplers. When connecting to VC sewer main, Shear Guard Indiana Seal (GPK) repair couplers manufactured by Fernco, Inc., or approved equivalent, may be used.

Bedding material in accordance with Section 801-2.8 shall be placed in the trench, prior to laying any type of sewer pipe, 2 inches below bottom of pipe up to 6 inches or smaller, 4 inches when pipe used is 8 inches or larger. Bedding material shall be installed to the centerline of the pipe and the full width of the excavating trench.

1209-4 MEASUREMENT AND PAYMENT

1209-4.1 THRU 4.5 (X)" SEWER SERVICE PIPE. Sewer Service Pipe shall conform to the Specifications found in Section 1209-2.1. On new construction, the sewer service pipe shall be measured by the linear foot (LF) from centerline of sewer main to plugged end of service connection. On reconstruction projects, the sewer service pipe shall be measured by the linear foot (LF) from end of the wye to the end of the existing sewer service pipe. Sewer service pipe shall be paid for at the unit price bid for "(X) Inch Sewer Service Pipe" complete, in place, and accepted by the ENGINEER.

1209-4.6 THRU 1209-4.10 (X)" SEWER PIPE BEND. The angle of the bend shall be compatible with the type of sewer service pipe and wye branch selected to provide a 90 degree angle between the sewer mainline and sewer service line. The sewer pipe bend shall be measured on an individual unit basis (EA) and paid for at the unit price bid for "(X)" Sewer Pipe Bend" complete, in place, and accepted by the ENGINEER.

1209-4.11 THRU 1209-4.20 (X)" WATER SERVICE LINE. Water service lines shall conform to the Specifications found in Section 1209-2.3 and Section 1209-2.4. On new construction, the water service pipe shall be measured on an in-line basis by the linear foot (LF) from the centerline of the water main at the water service connection to the end of the water service pipe. On reconstruction projects, the water service pipe shall be measured on an in-line basis by the linear foot (LF) from the water service connection directly to the end of the existing water service pipe. Water service lines shall be paid for at the unit price bid for "(X)" Water Service Line" complete, in place, and accepted by the ENGINEER.

1209-4.40 THRU 4.49 (X)" WATER SERVICE CONNECTION. This connection shall include one tapping sleeve, one tap to the water main, and one corporation stop. The connection shall be measured as a combined unit on an individual unit basis (EA) and paid for at the unit price bid for "(X)" Water Service Connection" complete, in place, and accepted by the ENGINEER.

1209-4.50 Thru 4.54 (X)" CURB STOP AND (X)" CURB BOX. The curb stop and curb box shall be measured as a combined unit on an individual unit basis (EA) and paid for at the unit price bid for "(X)" Curb Stop and (X)" Curb Box" complete, in place, and accepted by the ENGINEER.

1209-4.55 DISCONNECT WATER SERVICE LINE. Disconnecting a water service line shall consist of turning off the corporation stop at the main and disconnecting the pipe after the corporation stop. Disconnect Water Service Line shall be measured on an individual unit basis (EA) and paid for at the unit price bid for "Disconnect Water Service Line" complete, in place, backfilled, and accepted by the ENGINEER.

SECTION 1210 – PAVEMENT MARKING

1210-1 DESCRIPTION

This work consists of furnishing and installing specified pavement markings and related items in accordance with these Specifications at the designated locations as shown in the plans or as directed by the ENGINEER.

All pavement marking installation, materials, and construction requirements not covered in these specifications shall be in accordance with Section 762 of the latest edition of the *Standard Specifications for Road and Bridge Construction*, North Dakota Department of Transportation.

1210-2 MATERIALS

1210-2.1 GENERAL. All paint and glass beads shall be preapproved by the North Dakota Department of Transportation Materials and Research Division.

1210-2.2 GLASS BEAD CERTIFICATION. The manufacturer shall furnish one copy of a certificate for each lot of the material furnished, giving the properties of the beads, and certifying that they meet the required specifications. The affidavit shall show designation of the sample, lot number, and date of manufacture.

1210-2.4 PREFORMED PATTERNED PAVEMENT MARKING FILM. All 6-inch and 24-inch pavement marking film shall be Preformed Thermoplastic PreMark with Vizigrip as manufactured by Ennis-Flint, or 125mil Optamark as manufactured by Geveko Markings, or 3M Durable Retroreflective Liquid Pavement Markings Series 500, or approved equivalent, and shall be approved by the ENGINEER prior to ordering.

All other pavement marking film shall be 380 ES as manufactured by 3M, or an approved equivalent, and shall be approved by the ENGINEER prior to ordering. The pavement marking film 380 ES shall be installed using primer and as recommended by manufacturer.

The thermoplastic pavement markings installed on asphalt pavements shall be 125 +/-5 mils thick. The thermoplastic pavement markings installed on concrete pavements shall be 125 +/- 5 mils thick. The thermoplastic pavement markings shall be installed as recommended by the manufacturer.

1210-2.4 PAVEMENT MARKING MASKING PAPER LINER. Masking paper liner material shall meet the pavement marking manufacturer's recommendations for masking.

1210-3 CONSTRUCTION REQUIREMENTS

1210-3.1 PAVEMENT MARKING CERTIFICATION. All CONTRACTORS installing pavement marking material for the City shall provide a crew of which 50 percent are trained and “certified” by the manufacturer. “Certified” CONTRACTORS must be able to provide proof of the certification through a manufacturer-provided ID card or certification paper.

1210-3.2 PAINTED PAVEMENT MARKING. Painted pavement marking shall be installed as soon as the new pavement has been placed and traffic control devices have been removed. All longitudinal painted pavement marking lines shall be installed with a striping truck as described in Subsection 1210-3.4, unless approved the the ENGINEER. The ENGINEER will determine if the painted pavement markings have to be offset to allow for the pavement marking film installation. The painted pavement marking shall have a thickness of between 18 mils and 21 mils.

1210-3.3 PAINTED PAVEMENT MARKING MONITORING SYSTEM DESCRIPTION. All striping trucks shall require a computerized data logging system (DLS) for monitoring the application of pavement marking to the roadway. DLS is an addition to pavement marking equipment to record data relating to pavement marking installation.

All painted pavement marking operations shall be in accordance with NDDOT Standard Specifications for Road and Bridge Construction Section 762. The system shall document for a minimum length of 300 linear feet. The following data shall be included in the documentation from the DLS:

1. Application vehicle speed to nearest 0.1 mph.

2. Weight (lbs) and/or volume (gal as measured through a piston displacement pump mechanism) of paint material used by color.

3. Weight (lbs) of reflective material used.

4. Pavement surface temperature (°F).

5. Air temperature (°F).

6. Dew point (°F).

7. Humidity (%).

8. The system shall record the average material application rates and film thickness calculated over the section painted.

An electronic or printed record of the data shall be provided to the ENGINEER daily. The ENGINEER may determine that more frequent submission is necessary, particularly if equipment malfunctions occur. Either the printed or electronic records shall be produced in their final form prior to the records being removed from the pavement marking equipment (i.e., the CONTRACTOR presents this to the ENGINEER in the field). If only one record is produced at the pavement marking equipment, the other may be produced in an office. However, the first record shall be presented to the ENGINEER prior to any of the data entering an office environment.

The electronic record shall be a comma or spaces delimited text file, adequate for insertion into a computerized spreadsheet software package or a spreadsheet format acceptable to the ENGINEER.

The CONTRACTOR shall provide the ENGINEER the above records for all longitudinal non-handwork lines painted.

The CONTRACTOR shall have equipment with functional DLS equipment. It shall be operational, calibrated, and in use during pavement marking operations.

The CONTRACTOR shall provide the ENGINEER the DLS manufacturer's recommendations for equipment calibration frequency and provide certification that the equipment meets manufacturer's recommended calibrations.

A 100-foot distance shall be traveled prior to the start of pavement marking operations to verify the physical and electronic measurement of distance traveled is consistent.

DLS shall not be measured.

1210-3.4 PREFORMED PATTERNED PAVEMENT MARKING FILM. Preformed plastic pavement marking/thermoplastic pavement markings installed in the current chip sealing season shall be completed at least 2 weeks prior to chip sealing to allow for masking.

1210-3.5 INLAID PAVEMENT MARKINGS. All pavement marking film messages and various line widths on newly paved surfaces shall be inlaid into the hot asphalt surface according to manufacturer's recommendations. The CONTRACTOR shall place markings in the asphalt at the time of rolling operation when asphalt temperatures are above 140°F. The pavement marking film shall receive at least 2 roller passes. It is the CONTRACTOR's responsibility to protect the newly installed pavement marking from any damage. Damaged pavement marking shall be replaced at the CONTRACTOR's expense until the project is accepted.

In cases where inlaying pavement marking film isn't possible the CONTRACTOR shall contact the ENGINEER immediately. Temporary traffic control devices shall be installed and maintained and remain in place until painted pavement markings or

permanent pavement markings are complete. Temporary traffic control devices shall only be allowed for 48 hours after the road is paved.

All costs of maintaining temporary traffic control devices or painted pavement markings shall be the responsibility of the CONTRACTOR and shall be included in the pay item " Preformed Patterned Pavement Marking Film Messages and Various Line Widths."

The cost of inlaying pavement marking film messages and various line widths into the hot asphalt pavement shall be included in the pay item "Preformed Patterned Pavement Marking Film Messages and Various Line Widths."

1210-3.6 SURFACE PREPARATION. Prior to the placement of any preformed plastic pavement marking that cannot be rolled into hot asphalt, the placement area shall be cleared of debris using a high-velocity compressed air blower with minimum 185 cfm airflow and 120 psi at the air nozzle. The air nozzle shall be no less than 1/2 inch inside diameter commercial grade air compressor. The compressor shall be equipped with a moisture evaporator. A leaf blower shall NOT be an acceptable substitute for compressed air.

1210-3.7 MASKING OF PAVEMENT MARKING. This work consists of furnishing, installing, and removing specified masking liner and spotting tabs for pavement marking line and message at the designated locations as shown in the plans, or directed by the ENGINEER.

Just prior to beginning the seal coat installation, adhesive-coated paper liner shall be placed on the pavement marking to protect it from seal oil and chips. The paper liner shall overlap the in-place pavement marking by 1 inch. The paper liner shall be as recommended by the pavement marking manufacturer. Spotting tabs shall be placed at the beginning of each paper liner to provide for location of the paper liner. The paper liner shall be placed to the length of that day's seal run. All chip sealed paper liners shall be rolled up and removed without coming into contact with the new chip seal. Chip sealed liners and spotting tabs shall be removed from the site immediately after the seal coat application has been completed. The sweeping of the seal aggregates off the liners onto the sealed street surface shall not be allowed. The pavement marking film must be free of all sealant materials after the masking is removed. Any pavement marking film not free of sealant materials shall be replaced at the discretion of the ENGINEER at the CONTRACTOR's expense.

1210-3.8 GROOVING FOR PAVEMENT MARKINGS. The CONTRACTOR shall groove to make a recess in the concrete pavement surface for the preformed plastic pavement marking/thermoplastic pavement markings.

The groove shall meet the following tolerances:

Depth	125 mils ± 5 mils
Smoothness	ridges, within the groove, no more than 6 mils higher than

	either adjacent valley
Width	line width plus 1/2 inch
Length	line length plus 3 inches per end of line
Line End Tapers	3 inches

For messages, the area grooved shall be the same area as the messages. Grooving a rectangular area to contain the message shall not be allowed. Grooving shall meet the depth requirements specified above. The equipment and method used shall be approved by the pavement marking manufacturer.

The groove shall be made in a single pass dry cut using stacked diamond cutting heads mounted on a floating head with controls capable of providing uniform depth and alignment. The bottom of the groove shall have a fine corduroy finish. Grooves shall be clean and dry prior to pavement marking application. The equipment shall be self-vacuuming, and be capable of vacuuming and containing all dust contaminates from entering the air, and leave the cut groove ready for pavement marking installation. If the ENGINEER in the field deems that the dust collection is not adequate, the ENGINEER may shut down the CONTRACTOR's operation until the problem has been fixed according to the satisfaction of the ENGINEER. The pavement marking shall be placed in the grooves the same day as the pavement is grooved.

1210-3.9 OBLITERATION OF PAVEMENT MARKINGS. Removal of pavement markings shall not permanently damage the surface or texture of the pavement. Where blast cleaning is used for removal of markings or other objectionable material, the sand or other blast material left on the pavement shall be removed immediately. No carbide or diamond tip blades or wheels are allowed on removal equipment. All removal methods shall be demonstrated by the CONTRACTOR and approved by the ENGINEER in the field before removal is allowed.

1210-4 MEASUREMENT AND PAYMENT

1210-4.1 PAINTED PAVEMENT MARKING - LINE AND MESSAGE. All labor, equipment, materials, and traffic control necessary for installing Painted Pavement Marking shall be included in the unit price bid for "Painted Pavement Marking - Line and Message."

All manufacturer representation, labor, equipment, reports, and documentation for the DLS monitoring system shall not be measured separately but included in the pay item "Painted Pavement Marking."

The item Painted Pavement Marking - Line shall be measured by the linear foot (LF) of the various widths of installed line complete, in place, and accepted by the ENGINEER.

The item Painted Pavement Marking - Message shall be measured by the square foot (SF) of the message installed complete, in place, and accepted by the ENGINEER.

Pay Item		Pay Unit
1210-4.1	PVMT MRKNG PAINTED - 4” LN	Linear Foot
1210-4.11	PVMT MRKNG PAINTED - 6” LN	Linear Foot
1210-4.12	PVMT MRKNG PAINTED - 8” LN	Linear Foot
1210-4.13	PVMT MRKNG PAINTED - 24” LN	Linear Foot
1210-4.14	PVMT MRKNG PAINTED - MESSAGE	Square Foot

1210-4.2 PREFORMED PATTERNED PAVEMENT MARKING FILM LINE AND MESSAGE. All labor, equipment, materials, and traffic control necessary for installing Preformed Patterned Pavement Marking Film shall be included in the unit price bid for “Preformed Patterned Pavement Marking Film Line and Message.”

The item Preformed Patterned Pavement Marking Film - Line shall be measured by the linear foot (LF) of the various widths of installed line complete, in place, and accepted by the ENGINEER.

The item Preformed Patterned Pavement Marking Film - Message shall be measured by the square foot (SF) of the message installed complete, in place, and accepted by the ENGINEER.

Pay Item		Pay Unit
1210-4.2	PREPAT PVMT MRKNG FLM - 4” LN	Linear Foot
1210-4.21	PREPAT PVMT MRKNG FLM - 6” LN	Linear Foot
1210-4.22	PREPAT PVMT MRKNG FLM - 8” LN	Linear Foot
1210-4.23	PREPAT PVMT MRKNG FLM - 24” LN	Linear Foot
1210-4.24	PREPAT PVMT MRKNG FLM - MESSAGE	Square Foot

1210-4.3 PREFORMED PATTERNED PAVEMENT MARKING LINE AND MESSAGE - MASKED. All, labor, equipment, materials, and traffic control necessary to furnish, install, and remove Masked Pavement Marking Film shall be included in the unit price bid. The costs of the Pavement Marking Film shall be Included in these bid items.

Preformed Patterned Pavement Marking Line - Masked shall be measured by the linear foot (LF) of the various widths of installed masked line installed complete, in place, and accepted by the ENGINEER.

Preformed Patterned Pavement Marking Message - Masked shall be measured by the square foot (SF) of the masked message installed complete, in place, and accepted by the ENGINEER.

Pay Item		Pay Unit
1210-4.3	PREPAT PVMT MRKNG FLM MSKD - 4” LN	Linear Foot
1210-4.31	PREPAT PVMT MRKNG FLM MSKD - 6” LN	Linear Foot
1210-4.32	PREPAT PVMT MRKNG FLM MSKD - 8” LN	Linear Foot

1210-4.33	PREPAT PVMT MRKNG FLM MSKD - 24” LN	Linear Foot
1210-4.34	PREPAT PVMT MRKNG FLM MSKD - MESSAGE	Square Foot

1210-4.4 PREFORMED PATTERNED PAVEMENT MARKING LINE AND MESSAGE - GROOVED. All labor, equipment, materials, and traffic control necessary to install Grooved Pavement Marking Film shall be included in the unit price bid for “Preformed Patterned Pavement Marking Line and Message Grooved.” The costs of the Pavement Marking Film shall be Included in these bid items.

Preformed Patterned Pavement Marking Line - Grooved shall be measured by the linear foot (LF)of the various widths of grooved line installed, complete in place and accepted by the ENGINEER.

Preformed Patterned Pavement Marking Message - Grooved shall be measured by the square foot (SF) of the grooved message installed complete, in place, and accepted by the ENGINEER.

Pay Item		**Pay Unit**
1210-4.4	PREPAT PVMT MRKNG FLM GRVD - 4” LN	Linear Foot
1210-4.41	PREPAT PVMT MRKNG FLM GRVD - 6” LN	Linear Foot
1210-4.42	PREPAT PVMT MRKNG FLM GRVD - 8” LN	Linear Foot
1210-4.43	PREPAT PVMT MRKNG FLM GRVD - 24” LN	Linear Foot
1210-4.44	PREPAT PVMT MRKNG FLM GRVD - MESSAGE	Square Foot

1210-4.5 OBLITERATION OF PAVEMENT MARKINGS. All labor, equipment, materials, and traffic control necessary for Obliteration of Pavement Markings shall be included in the unit price bid for “Obliteration of Pavement Markings.”

Obliteration of Pavement Markings shall be measured by the square foot (SF) of the obliterated pavement markings complete, in place, and accepted by the ENGINEER.

Pay Item		**Pay Unit**
1210-4.5	OBLITERATION OF PVMNT MRKNG	Square Foot

SECTION 1211 – TRAFFIC CONTROL

1211-1 DESCRIPTION

This work consists of furnishing, installing, and maintaining all required traffic control devices according to an approved traffic control plan or details shown on the plans. This includes specifications providing for watch persons, flaggers, pilot cars, and necessary precautions for protecting the public, the workers, and the work.

The CONTRACTOR must submit a traffic control plan to the ENGINEER for approval at least 2 weeks prior to setting up the detour closing a roadway.

The CONTRACTOR shall provide, prior to construction, all proposed haul routes to the ENGINEER for approval.

Press releases shall be submitted to the ENGINEER for review a minimum of 3 days prior to each change in operation or phase. Once approved, they must be sent to local media as well as fire, police, and ambulance. Information shall include anticipated duration, detour routes, and pedestrian issues. A press release is required to announce the reopening of a detour when not otherwise notified.

The CONTRACTOR is responsible for the placement and maintenance of all work zone signs and barricades during the utility construction. All traffic control devices shall be installed and maintained in a safe and orderly manner complying with the provisions of Chapter 6 of the most recent update of the *Manual on Uniform Traffic Control Devices for Streets and Highways*, U.S. Department of Transportation.

The CONTRACTOR is responsible for maintaining and protecting traffic during a temporary suspension of work.

The CONTRACTOR shall designate a superintendent and an alternate for emergency repair service to traffic control devices. Telephone numbers for these personnel shall be provided to the ENGINEER. These personnel shall be available at all times to respond to an emergency.

When an emergency occurs and the superintendent and alternate are not available to take protective measures, the CITY may authorize others to do the necessary work and deduct the cost of the work from the CONTRACTOR.

1211-2 MATERIALS AND EQUIPMENT

All materials and construction details not specifically addressed in the Plans, Special provisions, and Construction Specifications for Municipal Public Works, Bismarck, North Dakota shall be in conformance with Section 704 of the most recent edition and supplements of the Standard Specifications for Road and Bridge Construction, North Dakota Department of Transportation, and the provisions of Chapter 6 of the most

recent update of the *Manual on Uniform Traffic Control Devices for Streets and Highways*.

Traffic control devices used on the project will be rated according to the American Traffic Safety Services Association (ATSSA) *Quality Standards for Work Zone Traffic Control Devices.* The definitions of "acceptable," "marginal," and "unacceptable" and the evaluation guidelines shall be as defined in ATSSA's *Quality Standards for Work Zone Traffic Control Devices.*

Payment for traffic control devices, labor, plans, and maintenance shall be measured and paid by the lump sum as "Traffic Control" for each unit.

1211-3 CONSTRUCTION REQUIREMENTS

1211-3.1 GENERAL. The CONTRACTOR shall furnish, install, and maintain all required traffic control devices, and shall provide watchpersons and flaggers as necessary to protect the work and to ensure public and workers' safety. All required control devices shall be available for installation when needed and shall be maintained, relocated, covered, or removed as necessary.

If the CONTRACTOR has not furnished, installed, located, maintained, or removed traffic control devices as required, the ENGINEER may direct work to cease until the deficiencies have been corrected.

Traffic control devices shall be operated only as long as they are needed. Only those devices that apply to existing conditions shall be in place.

The traffic control devices shall have breakaway supports that meet the requirements of the AASHTO Roadside Design Guide Chapter 4 Section 4.1. All signs on fixed supports shall be placed on breakaway supports, unless they are located behind a barrier or crash cushion. The CONTRACTOR shall provide documentation showing that these requirements are being met for any sign supports used that do not comply with the NDDOT's Standard D-754-8.

Barricade rails and panels with stripes which begin at the upper right side and slope downward to the lower left side are designated as "right" panels and are to be used on the right side of a traffic lane. Stripes which begin at the upper left side and slope downward to the lower right side are designated as "left" panels and are to be used on the left side of a traffic lane.

1211-3.2 WORK AREA SIGNING. Appropriate traffic control devices as shown on the traffic control plan drawings shall be erected and maintained for each type of work area required by the operations. When no details are provided for the particular type of construction situation involved, traffic control devices shall be installed according to the *MUTCD* or as directed by the ENGINEER. No construction work shall be started until the proper traffic control devices for the work area are in place. If the CONTRACTOR's

construction operations or sequence requires additional signing, flaggers shall be furnished at the CONTRACTOR's expense or construction operations shall be suspended in that area until the condition is corrected and the required signs have been installed.

When traffic is carried through the construction area, two-way traffic shall be maintained when practicable. One-way traffic shall be directed by flag persons or maintained under control of an approved traffic signal system. All signs and other control devices shall indicate actual conditions and shall be relocated, removed, or changed, as conditions require. Signs necessary only during hours when work is actually being performed shall be removed or completely covered when no work is in progress.

All traffic cones shall be reflectorized and be a minimum of 36 inches in height. Non-reflectorized cones shall not be allowed.

When pedestrian facilities are impacted due to maintenance or construction, signs mounted on pedestrian barricades shall be placed to allow pedestrian traffic to route around the work zone per detail 1212-1A. Pedestrians shall be rerouted to pedestrian facilities when feasible. In residential areas the ENGINEER will determine what type of pedestrian guidance is required.

The cost to remove and reset existing traffic signs to accommodate construction shall be included in the price bid for other items.

1211-3.3 TEMPORARY SUSPENSION. During a temporary suspension of work, the CONTRACTOR is responsible for maintaining and protecting traffic. Resetting of signs removed because of a winter suspension will not be measured for payment.

1211-3.4 TRAFFIC CONTROL SUPERVISOR. The CONTRACTOR shall designate a qualified traffic control supervisor. This supervisor shall be in addition to the watchperson. If this traffic control supervisor becomes unavailable on the project, the CONTRACTOR shall designate a qualified replacement supervisor.

a. Qualifications. The traffic control supervisor shall:

(1) Have completed a NDDOT-approved comprehensive course of study based on Part VI of the *MUTCD* and furnish proof hereof.

(2) Be familiar with the requirements traffic control plans and specifications.

(3) Have a total of at least 12 months field experience with traffic control plans, layouts, and maintenance.

(4) Be competent to supervise personnel in traffic control operations.

b. Duties. The traffic control supervisor shall:

(1) Provide traffic control as required by the plans, specifications, *MUTCD*, or as directed by the ENGINEER.

(2) Supervise the installation, operation, inspection, maintenance, and removal of the traffic control system.

(3) Correct traffic control conditions that cause erratic vehicle movements, unexpected braking, etc.

(4) Propose changes to improve traffic flow through the work zone.

(5) Be accessible to the job site within 1 hour of notification and be "on call" on a 24-hour basis.

(6) Provide the ENGINEER with documentation of all traffic control activities.

(7) Function as watchperson in his/her absence.

1211-3.5 WATCHPERSONS. Watchpersons shall be provided to patrol the project to assure that the traffic control devices are properly placed in accordance with the traffic control plans and standards. The project shall be patrolled daily at least once during daylight before 10 a.m. and at least once during darkness after 10 p.m., including weekends and days when no work is in progress. The CONTRACTOR shall provide written documentation to the ENGINEER of the watchperson's hours and activities.

The CONTRACTOR shall immediately assist the watchperson, whenever needed, to correct conditions that cause erratic traffic movement, unexpected braking, etc., and erect, repair, replace, or relocate the required traffic control devices. Emergency assistance shall be provided to motorists, when needed, due to roadway conditions. Suspension of watchperson service may be permitted during periods of authorized suspension or after substantial completion of the work, provided the job site is in safe condition.

1211-3.6 EMERGENCY CONTROL. Written notification shall be provided to the ENGINEER, the State Police, and local law enforcement agencies of the names, addresses, and telephone numbers of the CONTRACTOR's Superintendent and an alternate. Either the Superintendent or the alternate shall be on call for notification of any emergencies that may arise during periods when construction operations are not in progress. Changes in the designation of the superintendent or the alternate shall immediately be made known, in writing, to the ENGINEER and the law enforcement agencies.

The CONTRACTOR's superintendent or alternate, or traffic control foreman shall meet with the ENGINEER before work commences to review traffic control plans, and shall be available at all times to periodically discuss modifications to the traffic control plan with the ENGINEER or his representative.

When an emergency occurs and the superintendent or alternate are not available to take protective or corrective measures, the department will authorize others to do the necessary work and deduct the cost of the work from the CONTRACTOR.

1211-3.7 MAINTENANCE OF TRAFFIC CONTROL DEVICES. Traffic Control Devices used on the project will be rated according to the American Traffic Safety Services Association's (ATSSA) *Quality Standards for Work Zone Traffic Control Devices*. The definitions of "acceptable," "marginal," and "unacceptable" and the evaluation guidelines shall be as defined in ATSSA 's *Quality Standards for Work Zone Traffic Control Devices*.

At the time of initial set up and major phase changes, 100 percent of each type of device (signs, barricades, vertical panels, drums, cones, tubular markers, warning lights, arrow panels, etc.) shall be classified as acceptable. The CONTRACTOR shall certify in writing to the ENGINEER that all traffic control devices installed are classified as acceptable.

For signs, barricades, vertical panels, drums, cones, tubular markers, and arrow panels, the number of acceptable devices of each type may decrease to 75 percent of the initial quantity as a result of damage or deterioration during the course of work. The remaining 25 percent of each type of devices may be in the marginal category. Warning lights shall be "acceptable" or "marginal" at the limits defined in the ATSSA Standards. All unacceptable devices found on the job site shall be replaced within 12 hours.

Traffic control devices not covered by the evaluation guidelines shall be maintained to operate effectively and be in good repair.

Traffic control devices shall be cleaned as necessary to remove dirt, mud, or other foreign material which reduces the brightness of the reflectorized sheeting or warning lights.

1211-3.8 FLAGGING. The garments worn by flaggers shall comply with the American National Standard for High-Visibility Safety Apparel and Headwear ANSW/ISEA 107-2010.

Flaggers shall not be assigned other duties while working as authorized flaggers.

The CONTRACTOR is responsible for providing certified flaggers. The CONTRACTOR will acknowledge in writing, before any flagging work begins on the project, that all flaggers are certified before performing flagging on the project.

1211-3.9 GARMENT REQUIREMENTS FOR ALL PERSONNEL. Garments complying with the standard ANSI/ISEA 107-2010 shall be worn by everyone working within city rights-of-way or work zones.

1211-4 MEASUREMENT AND PAYMENT

1211-4.1 TRAFFIC CONTROL. Traffic Control includes furnishing, installing, and maintaining the required signs, barricades, and other warning devices, relocating or removing devices as dictated by the work progress, and providing watchpersons/traffic control supervisor to patrol the work. These items shall be included in the pay item "Traffic Control."

Payment (over the lump sum bid for "Traffic Control") may be authorized for additional traffic control devices if the type or number of such devices requested by the ENGINEER exceeds the requirements indicated by the traffic control plan or when the need for additional traffic control devices is created as a result of contract revisions.

No additional payment will be authorized for additional traffic control devices required as a result of the CONTRACTOR's method or sequence of operation, whether or not the type of operation is included in the typical work area layouts shown on the traffic control plan sheets.

Traffic Control shall be measured as a lump sum, and graduated payment for the contract lump sum bid will be made according to the following schedule:

Percent of Bid Price.

40%	-	When all initial traffic control devices required to start construction have been installed.
50%	-	When contract is 25% complete.
75%	-	When contract is 50% complete.
90%	-	When contract is 75% complete.
100%	-	When contract is complete.

When additional traffic control devices requested by the ENGINEER qualify for payment, furnishing and installing such devices shall be made using the prices listed in the *Rental Rates for Equipment and Traffic Control Devices* published by the NDDOT.

The above payments for installation include the cost of removing or relocating the traffic control devices. No additional payment will be made when traffic control devices are covered up, or temporarily taken out of service, and then returned to use.

All standard traffic control devices furnished by the CONTRACTOR shall remain the property of the CONTRACTOR.

Flagging shall be included in the pay item "Traffic Control."

If the CONTRACTOR is required to furnish special non-standard signs not shown on the Plans, payment will be made at invoice price plus 15 percent, and the sign will become the City's property after it has been removed from service. Payment for sign supports and installation of special signs will be made using the prices listed in the *Rental Rates for Equipment and Traffic Control Devices* published by the North Dakota Department of Transportation.

SECTION 1212 – HIGHWAY SIGNS AND POSTS

1212-1 DESCRIPTION

This work item consists of furnishing, fabricating, and installing highway signs, delineators, and supporting structures.

1212-2 MATERIALS

A. General. All materials furnished and used in this work shall be new and shall meet the plans, the NDDOT Standard Drawings, Section 1212 of the Standard Specifications, and the following requirements:

Signs, supporting structures, breakaway bases, anchor units, brackets, stringers, and hardware shall be fabricated to meet the dimensions, metal gauge, and bolt holes set forth in the contract and NDDOT Standard Drawings. All flat sheet sign backings shall be aluminum with reflective sheeting applied as specified.

The traffic control sign details not otherwise specified shall meet the *MUTCD* published by the Federal Highway Administration.

All sign faces shall be according to the detail drawings and the alphabets shown in the *MUTCD*, Standard Highway Signs, and Standard Alphabets, published by FHWA. Sign faces not detailed in these publications shall meet the detailed drawings shown in the supplementary Standard Highway Signs booklet published by the NDDOT.

Regulatory, warning, and guide signs shall be detailed and dimensioned according to detailed drawings of the Standard Highway Signs booklet. These detail drawings are available to the sign fabricator upon request from the NDDOT. Signs not illustrated in these booklets shall be as shown on the NDDOT Standard Drawings. The last number in the sign numbers shown is the width of the sign required.

Variable message sign dimensions have been computed by the North Dakota Department of Transportation in order to draft these signs by mechanical means. These message computations have been tabulated and shall be used to lay out these sign faces in the fabricator's shop. These tabulated sheets will be furnished to the CONTRACTOR upon request after the contract has been awarded.

B. Concrete. Concrete used in this item of work shall be Class AE portland cement concrete mixed and proportioned as specified in Section 500.

C. Reinforcing Steel. The reinforcing steel shall meet Subsection 501-2.

D. Delineators. Delineators shall meet Subsection 1212-6.

E. Hardware and Fittings. Signs, supporting structures, breakaway bases, anchor units, brackets, stringers, and all hardware and fittings shall meet Subsection 1212-5(A).

F. Posts. Posts shall meet Subsection 1212-5 B.

1212-3 CONSTRUCTION REQUIREMENTS

A. Locating and Positioning Signs and Sign Structures. All sign installation shall be performed by a sign installation CONTRACTOR as approved by the ENGINNER. Each sign and structure shall be located according to the Plans or, where necessary, for maximum effect of the sign. Installed signs and structures will be inspected at night for maximum effect and minimum specular reflection. If any sign exhibits specular reflection or is ineffective at night, the sign shall be adjusted at the CONTRACTOR's expense.

Signs and delineators located less than 30 feet from the pavement edge shall be erected with the sign face truly vertical and turned 93 degrees away from the center and direction of travel of the lane which the facility serves. Signs located 30 feet or more from the edge of the pavement edge shall be erected with the sign face truly vertical and aligned 90 degrees from the center and direction of travel of the lane which the offset sign serves. Special attention shall be given to the location and positioning of signs and delineators at the point where lanes divide, or on curves, to avoid specular reflection and to obtain maximum effectiveness of the facility.

B. Sign Fabrication.

1. **General.** All sign backing for flat sheet signs shall be aluminum, unless noted otherwise, with reflective sheeting applied as specified herein. On large variable message signs the messages, symbols, and borders shall consist of directly applied reflective sheeting cut to desired shapes. The message, symbols, and border shall be applied as specified by the sheeting manufacturer.

2. **Fabrication of Sign Backing.** Sign backings shall be cut to size and shape and shall be free of buckles, warps, dents, cockles, burrs, and all defects resulting from fabrication. The surface of all signs shall be plane surfaces. All cutting, shearing, and drilling or punching of holes (except mounting holes for demountable letters, numerals, symbols, and borders) shall be completed before metal degreasing and application of reflective sheeting.

3. **Cleaning and Processing.** Cleaning and processing of sign backing shall take place before applying the reflective sheeting. Cleaning and processing shall be performed using the sheeting manufacturer's instructions and recommendations as well as the requirements of Section 1212.

   All metal sign backing material shall be handled only by handling devices or clean canvas gloves between cleaning and applying reflective sheeting. Metal

shall not come in contact with greases, oils, or other contaminants before application of reflective sheeting. When backing materials are chromate-conversion coated beforehand and are allowed to set for several days before applying reflective sheeting, the application surface shall be given a solvent wipe before reflective sheeting application.

4. **Fabrication of Flat Sheet Signs.** The background of the flat sheet signs shall be screened on reflective sheeting as specified by the manufacturer of the reflective material and as specified herein. Messages, symbols, and borders may be screened on or directly applied reflective sheeting. Directly applied reflective sheeting shall be applied as specified by the sheeting manufacturer. Colors shall meet the requirements of the contract and as shown in the *MUTCD*. Care shall be taken so screening inks are compatible with reflective sheeting backgrounds.

   Reflective material shall meet Subsection 1212-2.

   The reflective sheeting used on flat sheet sign backings larger than the manufacturer's material shall require splicing. All sheeting on each individual sign shall be from the same manufacturer's lot, and shall be spliced in one direction only. No more than one splice will be permitted per sign. Vertical splices shall be in the center of the sign. Horizontal splices, if used in lieu of the vertical splice, shall be in the center of the sign with the top portion overlapping the bottom portion of the sheeting when it is in the upright position.

   Heat-activated, adhesive-coated, reflective sheeting may be overlapped not less than 3/16 inch or by a butted gap not to exceed 1/32 inch. Splices will be permitted only on sign screens processed with transparent colors. Pressure-sensitive, adhesive-coated, reflective sheetings shall be overlapped not less than 3/16 inch.

   The overlapped splice shall be made without screening paints between the reflective sheeting.

   The sign face shall be processed and finished with material as specified by the sheeting manufacturer. Processing of Type IIIA or IIIB Reflective Sheeting with screened-on messages shall be accomplished before applying to the sign backing. Processing of Type II Reflective Sheeting may be accomplished before or after applying to the sign backing.

   The finished signs shall have a smooth, uniform surface. All letters and numbers shall be clear cut and sharp.

5. **Fabrication of Panel Signs.** The background shall be applied to the panels as specified by the reflective sheeting manufacturer.

Reflective sheeting shall be overlap spliced. The splice shall be overlapped not less than 3/16 inch, and sheeting applied to panels shall extend over the edges and down the side legs a minimum of 1/16 inch. Splices shall be at a 90-degree angle to the length of the panel. The splices shall be uniformly and neatly made throughout their entire length. No individual panel shall have more than two splices, and the minimum distance between adjacent splices shall be 8 feet.

When guide sign symbols (e.g., handicap, hospital, and airport symbol signs) are required on larger guide signs as part of the message, the symbol signs shall be riveted to the larger signs and be installed at the locations shown on the plans. The cost of the symbol signs and the labor, equipment, and material needed to attach them will not be bid separately, but will be included in the price bid for the panel or overlay of the sign.

6. **Date of Fabrication.** All signs receiving new sign facings shall be dated with the month and year fabricated. The date shall be placed on the back of the metal backing on the lower corner of sign near the edge closest to traffic so that it can be read from the ground. The dating layout shall consist of 1/4 inch high numbers on a 2¼ inches long by 1¾ inches high pressure-sensitive label. The numbers imprinted on the upper part of the label shall be 1 through 12, with the last 2 digits of 4 consecutive years printed across the bottom (as 92, 93, 94, 95). The month and year of fabrication shall be punched out. The label shall meet Section 1212-4. The cost of furnishing, fabricating, and installing labels shall be included in the price bid for “Flat Sheet for Signs Type II and III A,” “Panel for Signs Type II and III A,” “Refacing Signs Type II and III A,” or “Overlay Panel Type II and III A.”

C. Erection of Sign Supports and Delineators.

1. **General.** The ENGINEER will verify the support lengths on all new sign supports prior to the materials being ordered by the CONTRACTOR. All sign supports shall be firmly set and plumb after erection. All concrete foundations shall be constructed as specified, with the top sloped enough to drain away from the sign support. All exposed concrete above ground surface shall be given a rubbed finish. Excess excavation material removed to set sign supports shall be disposed of at the CONTRACTOR’s expense. A driving cap shall be used when driving a sign support.

2. **Delineator Posts.** Delineator posts shall be driven without being damaged. If the drilled or punched hole method is used, the hole shall be large enough so the post can be set without damage. Any damage to utilities or structures as a result of construction operations shall be repaired at the CONTRACTOR’s expense.

3. **Anchor for Telescoping Perforated Tubes and Flange Channel Supports.** Anchors for telescoping perforated tubes and flange channel supports shall be driven. The perforated tube anchor shall be driven to a maximum of 4 inches

above the ground or sidewalk and 4 inches maximum installed height above ground or sidewalk for flange channel anchor.

Anchors shall be installed at Plan length, unless the ENGINEER determines a shorter length is sufficient due to good soil bearing developed when driving the anchor. Anchor lengths may be reduced to a minimum of 3 feet. When set in sidewalk, the anchor plate may be omitted.

The sidewalk shall be cored to install the anchor unit and the cored area shall be filled with new concrete to restore the sidewalk surface.

4. **Tubular Sign Supports.** Tubular sign supports shall be set in a Class AE portland cement concrete base, constructed as shown on the plans. Breakaway base plates shall be assembled with the bolts torqued to plan requirements. The plates shall be carefully placed so the tapered bolt slot tapers toward approaching traffic. Either the stub post or the anchor bolt design may be used as detailed. If the anchor bolt design is used, a portland cement grout shall be used to raise the top of the foundation to a snug fit under the base plate. When standard round pipe posts are shown on the plans for signs that have 2 or more posts, the CONTRACTOR may elect to use either round sign supports or W-shape posts. Signs with 1 post shall use the round sign supports as shown on the plans.

5. **Splicing.** Splicing is permitted on telescoping and flange channel posts only to obtain the required post length. A splice shall be more than 5 feet above ground, and only 1 splice is permitted per post. Splicing costs shall be at the CONTRACTOR's expense. The weight of the splice will not be added to the post pay weight.

D. Mounting Flat Sheet Signs Type III A and III B Sheeting. Flat sheet signs shall be bolted to the supports and shall have a nylon washer between the flat washer and the sign face. Rubber incased washers may be substituted for nylon washers on work zone traffic control signs specified under Section 1211.

E. Remove Signs and Supports. Existing signs and supports shall be removed as specified. The signs and supports shall be delivered to the Public Works Department.

Removed signs and supports that become damaged during the removal process shall be replaced at the CONTRACTOR's expense.

F. Remove Sign Foundations. This item consists of removing signs, supports, and concrete foundations or piling and restoring the surface to match the surrounding area. Concrete foundations shall be removed to a depth of 2 feet below the ground line unless otherwise specified in the plans. The concrete foundations or perforated tube anchors removed shall become the property of the CONTRACTOR and be disposed of outside the CITY right-of-way.

G. Road Closed, Type III Barricade, Single Type III barricade shall consist of installing a Type III barricade and attaching a diamond grade Road Closed Sign R-11-2-48 per Detail Bin Standard Detail 1212-1.

Triple Type III Barricade shall consist of installing 3 Type III barricades, 2 without road closed signs and the center barricade with a road closed sign per Standard Detail B III 1212-1.

Barricades shall be set no more than five (5) feet beyond the end of the pavement.

1212- 4 METHOD OF MEASUREMENT AND BASIS OF PAYMENT

METHOD OF MEASUREMENT

A. Flat Sheets, Panels, and Extruded Aluminum Panels. Flat Sheets, Panels, and Extruded Aluminum Panels for signs will be measured to the closest 1/10 square foot (SF), complete, in place, and accepted by the ENGINEER. All hardware, stringers, and brackets required to attach signs to the posts shall be included in the pay item.

B. Galvanized Steel Posts.

1. **Galvanized Steel Posts - Telescoping Tube and Flange Channel.** Telescoping Tube and Flange Channel posts will be measured by the linear foot (LF), complete, in place, and accepted by the ENGINEER. All sizes will be measured and paid for as “Galvanized Steel Posts - Telescoping Perforated Tube or Flange Channel.”

   The post length shall be measured from the top of the post to the bottom of the anchor unit, as shown on the plans. The sleeves and breakaway base, if included, will not be measured for payment, but will be considered incidental to the cost of the post.

2. **Galvanized Steel Posts - Standard Pipe (Single).** Single post signs will be measured by the linear foot (LF) of each size installed and accepted by the ENGINEER. The post length shall be measured from the top of the breakaway base to the top of the post, as shown on the plans. The concrete base will be paid for separately.

3. **Galvanized Steel Posts - W-Shaped Posts (Two or More).** W-Shaped Posts will be measured by the linear foot of each size installed and accepted by the ENGINEER. The post length, the 12-foot driven pile length, and the 2-foot stub post, as shown on the plans, will be included in the length of post to be measured and paid for.

C. Breakaway Bases. Breakaway Bases for standard pipe, W-shape, and telescoping tubes will not be measured, and all hardware, stub posts, slip bases, and assembly will not be measured but will be incidental to the contract unit price bid for posts.

D. Delineators. The quantity will be measured by the number of delineators of each type installed, complete with reflectors.

E. Concrete Foundation. When concrete foundations are used on single post signs, the concrete will be measured by the cubic yard (CY) based on the quantity shown for each foundation complete, in place, and accepted by the ENGINEER. Reinforcing steel will not be measured but shall be included in the price bid for concrete.

The splices, post caps, plates, bolts, cutting fuse joints, and assembly will not be measured but will be incidental to the post.

F. Reset Sign Panels. The quantity to be paid will be measured by the number of locations at which a sign, or a sign assembly, has been reset. Signs and assemblies will be measured in place and accepted by the ENGINEER.

G. Reset Sign Supports. The quantity to be paid will be measured by the number of supports installed, complete, and accepted by the ENGINEER.

H. Removed Signs and Supports. Removed Signs and Supports will not be measured for payment, but will be incidental to other bid items. Cost of removal shall be included in the price bid for other items.

I. Remove Sign Foundations. The item “Remove Sign Foundations” will be measured by the number of foundations removed. The quantities measured will be paid for at the contract unit price, and will be full compensation for all labor, equipment, and material necessary to complete the removal and disposal.

J. Revise Fuse Joint. The item “Revise Fuse Joint” will be measured by the number of fuse joints revised. The quantities measured will be paid for at the contract unit price and will be full compensation for all labor, equipment, and material necessary to complete the work.

K. Overlay Panel. The item “Overlay Panel” will be measured by the square foot (SF) of panel in place and accepted by the ENGINEER. The quantities measured will be paid for at the contract unit price and shall include all labor, equipment, and material needed to complete the work.

L. Road Closed, Barricade Fence. The item "Road Closed, Barricade, Fence," will be measured and paid per each (EA) combination complete, in place, and accepted by the ENGINEER.

M. Relocate Road Closed, Barricade, Fence. This item shall be measured and paid per each (EA) relocation complete, in place, and accepted by the ENGINEER.

BASIS OF PAYMENT

Payment will be made at contract unit prices for the following:

Pay Item	**Pay Unit**
Flat Sheet for Signs, Type II, III A, or III B Reflective Sheeting	Square Foot
Panel for Signs -Type II, III A, or III B Reflective Sheeting	Square Foot
Extruded Aluminum Sign Panels Type III A, and III B Reflective Sheeting	Square Foot
Delineators, Type A, B, C, D, or E	Each
Class AE Concrete Sign Foundations	Cubic Yard
Reset Signs	Each
Reset Sign Supports	Each
Galvanized Steel Posts Telescoping Perforated Tube or Flange Channel	Linear Foot
____-Inch Galvanized Steel Post Standard Pipe (Single Post)	Linear Foot
____-Inch Galvanized Steel Posts (two or more)	Linear Foot
Remove Sign Foundations	Each
Revise Fuse Joint	Each
Overlay Panel	Square Foot
Road Closed, Barricade	Each

This payment will be full compensation for all labor, equipment, and materials necessary to complete the work.

1212-5 SIGN BACKING MATERIAL

A. Materials.

1. **Flat Sheet Aluminum.** Flat sheet aluminum shall be an alloy meeting ASTM B209 alloy 6061-T6, or 5052-H38 with mill finish.

2. **Extruded Aluminum Panels.** Extruded aluminum panels shall meet ASTM B221 Alloy 6063-T6. The panels shall be furnished in 12-inch and 6-inch sections as shown on the plans. All panels shall be flat and straight within commercial tolerances established by the aluminum industry.

1212-6 RETRO-REFLECTIVE SHEETING MATERIALS

A. General. The retroreflective sheeting stored under normal conditions shall be used within 1 year from the manufactured date. The packaging cartons or roll goods shall be marked with the manufacturer's lot numbers and manufacture date.

The surface of the barricade rails, drums, or cones shall be treated as recommended by the sheeting manufacturer before applying the reflective sheeting.

Type III C reflective sheeting shall have an identification symbol on the surface to differentiate it from other types of sheeting. The identification symbol shall not interfere with the function of the sheeting, but shall be visible to inspectors day or night without the use of special devices. The symbol shall be in a repeat pattern such that any 4-inch by 8-inch or 5-inch by 5-inch piece of the sheeting contains at least 1 full symbol.

The durability of the retroreflective sheeting shall be substantiated by the following accelerated weathering tests:

1. **Accelerated Outdoor Test.** When the retroreflective sheeting is processed and applied according to recommended procedures, the sheeting shall be weather-resistant, resistant to dirt and fungus accumulation, and following cleaning, shall show no discoloration, cracking, crazing, blistering, or dimensional change, and have not less than 50 percent for Type II and IV sheeting and not less than 80 percent for Type III A sheeting of the specified minimum brightness values shown in ASHTO M268 measured at an observation angle of 0.2 degrees and an entrance angle of -4 degrees when exposed to accelerated weathering for 30 months, south-facing, unprotected at 45°F.

2. **Accelerated Machine Test.** The retroreflective sheeting shall meet the artificial weathering requirements of AASHTO M268 measured at an observation angle of 0.2 degrees and an entrance angle of -4 degrees.

   The CONTRACTOR shall furnish written evidence showing conformance with one of the following:

   a. The accelerated outdoor test, done in North Dakota or in a state located at lower latitudes, or

   b. The accelerated machine test and 3 years of performance in the field with no problems.

   The CONTRACTOR shall secure from the manufacturer all warranties and guarantees with respect to materials, parts, workmanship, or performance which the products covered by the proposal bear, and include these warranties and guarantees with the certification.

B. Type II and III A Retroreflective Sheeting Material. Type II and III A retroreflective sheeting shall meet AASHTO M268 and the following:

Processed retroreflective sheeting shall be applied to approved sign base material and cleaned according to manufacturer's recommendations for use on traffic control signs. The CONTRACTOR shall furnish a written assurance that the sheeting will meet the requirements of the following tables throughout the satisfactory performance life and be effective for its intended purpose when viewed from a vehicle.

TYPE II RETROREFLECTIVE SHEETING

Sheeting Type and Color	Average Minimum Candelas Per Foot Candle Per Sq. Ft. at 0.2° Divergence and -4° Incidence*	Satisfactory Performance Life
Silver-White #1	30.0	5 years
Silver-White #2	36.0	5 years
Yellow	20.0	5 years
Red	5.0	5 years
Blue	2.0	5 years
Green	3.0	5 years
Orange	10.0	5 years
Brown	0.4	5 years

TYPE III A RETROREFLECTIVE SHEETING

Sheeting Type and Color	Average Minimum Candelas Per Foot Candle Per Sq. Ft. at 0.2° Divergence and -4° Incidence*	Satisfactory Performance Life
Silver-White	200.0	10 years
Green	36.0	10 years
Yellow	136.0	10 years
Red	36.0	10 years
Orange	80.0	3 years
Blue	16.0	10 years

*Candlepower measurement shall be made, following sign cleaning, in accordance with procedure recommended by the sheeting manufacturer.

C. **Type III B Retroreflective Sheeting.** Type III B retroreflective sheeting shall consist of optical lens elements adhered to a synthetic resin and encapsulated by a flexible transparent plastic that has a smooth outer surface. The sheeting shall have a pre-coated adhesive protected by an easily removable liner. This sheeting is

intended for use on rigid substrate signs and barricades used in the construction work zone. Type III B retroreflective sheeting shall meet AASHTO M268 and the following:

The CONTRACTOR shall furnish a written assurance that the sheeting will meet the requirements of the following table throughout the satisfactory performance life and be effective for its intended purpose when viewed from a vehicle:

TYPE III B RETROREFLECTIVE SHEETING

Sheeting Type and Color	Average Minimum Candelas Per Foot Candle Per Sq. Ft. at 0.2° Divergence and -4° Incidence*	Satisfactory Performance Life
White	200	3 years
Yellow	136	3 years
Orange	80	3 years
Prestriped Barricade	200/80	3 years

*Candlepower measurement shall be made, following sign cleaning, in accordance with procedure recommended by the sheeting manufacturer.

The impact resistance shall be tested on reflective sheeting, applied according to the manufacturer's recommendations to a cleaned, etched, aluminum panel of Alloy 6061 T 6,0.063 inches by 3 inches by 5 inches and conditioned for 24 hours at 0°C.

The sheeting to be tested for flexibility shall be conditioned for 24 hours at 0°C.

D. Type III C Retroreflective Sheeting. Type III C retroreflective sheeting shall consist of optical lens elements adhered to a synthetic resin and encapsulated by a flexible transparent plastic that has a smooth outer surface. The sheeting shall have a pre-coated adhesive protected by an easily removable liner. This sheeting is intended for use on plastic reboundable devices such as drums and flexible delineation posts. Type III C retroreflective sheeting shall meet the weathering requirements of AASHTO M268, Type IV and the following:

The CONTRACTOR shall furnish a written assurance that the sheeting will meet the requirement of the following table and be effective for its intended purpose when viewed from a vehicle.

TYPE III C RETROREFLECTIVE SHEETING
Average Minimum Candelas Per Foot Candle Per Square Foot

Observation Angle	Entrance Angle	White	Yellow	Orange
0.2°	-4°	250	170	100
0.2°	+30°	150	100	60
0.5°	-4°	95	62	30
0.5°	+30°	65	45	25

The impact-resistant aluminum panel shall be the same as Type III B reflective sheeting.

The impact resistance shall be tested on a Gardner Variable Impact Tester, I6-1120 using a 4-pound weight with a 5/8-inch rounded tip dropped from a 100 inch-pound setting.

Type III C reflective sheeting performance on reboundable plastic substrates shall be measured using the following test:

The device shall be impacted 3 times by a 4,000-pound vehicle, with a 20-inch bumper, at 40 mph. Each impact shall be a direct hit (glancing blows will not be allowed). After the impacts, the reflective sheeting shall be considered performing satisfactorily when no loss of sheeting results and there is no visible change in day and night performance (when viewed from 500 feet).

The sheeting to be tested for flexibility shall be conditioned for 24 hours at 0°C.

E. Type IV Reflective Sheeting. The Type IV reflective sheeting shall consist of high-gloss transparent ultra-violet light-stabilized polyester film bonded to a layer of polyester cube corner prisms with not less than 40,000 prisms per square inch meeting AASHTO M268 and the following:

1. **Type IV, Class 1 Reflective Sheeting.** The backing for the polyester sheeting used on barricade rails, drums, and traffic cones shall be an opaque-white plasticized polyester film not less than 0.004 inch thick with an adhesive backing meeting AASHTO M268, Class 1.

2. **Flexible Rollup Sign, Non-Adhesive Backing Fabric.** The polyester sheeting on the flexible rollup portable signs shall be coated on both sides with orange pigment polyester and shall meet the following specifications:

Base Fabric

Fiber	1,000 denier polyester
Weight	3 ounces/square yard
Fabric Count	10 warp, 10 fill

Coated Fabric		
Total Weight	14 ± 1/2 ounces/square yard	
Type of Coating	PVC	
Color	Orange	
Distribution	60 face, 40 back	

Mechanical Properties	**Federal Standard 191 Method**	
Tensile Strength	Warp 250, Fill 200	5100
Tear Strength	Warp 85, Fill 95	5134.1
Low Temperature	-65°F	
High Temperature Continuous	+180°F	
Abrasion Resistance (Taber)	1700 Cycles	5306
Flame Resistance	California Fire	Marshall Approved Reg. No. F 102.4

F. Wide Angle Prismatic Reflective Sheeting. The sheeting shall consist of prismatic lenses formed in a transparent synthetic resin, sealed, and backed with an aggressive pressure sensitive adhesive protected by a removable liner. The sheeting shall have a smooth surface with a distinctive interlocking diamond seal pattern and orientation marks visible on the face.

MINIMUM COEFFICIENT OF RETROREFLECTION
(Candelas Per Foot-Candle Per Square Foot)
90° Rotation Angle

Observation Angle (Deg.)	Entrance Angle (Deg.)	White	Orange
0.2	-4	800	300
0.2	+30	400	150
0.2	+50	120	50
0.5	-4	200	100
0.5	+30	100	50
0.5	+50	40	20

Daytime color shall conform to the table shown below. Color of sheeting mounted on aluminum test panels shall be determined instrumentally in accordance with ASTM E1164. Values shall be determined on a Hunter Lab Labscan 6000 0/45 Spectrocolorimeter with option CMR 559. Computations shall be done in accordance with ASTM E308 for the 2-degree observer.

COLOR SPECIFICATION LIMITS* (DAYTIME)

Color	1		2		3		4		**Reflectance Limit Y (%)**	
	X	Y	X	Y	X	Y	X	Y	Min	max.
White	.305	.305	.355	.355	.335	.375	.285	.325	40	–
Orange	.583	.416	.523	.397	.560	.360	.631	.369	12	30

*The 4 pairs of chromaticity coordinates determine the acceptable color in terms of the CIE 1931 standard colorimetric system measured with standard illuminant D65.

The sheeting shall show no cracking outside the impact area when the face of the panel is subjected to an impact of 100 inch-pounds, using a weight with a 5/8-inch diameter rounded tip dropped from a height necessary to generate an impact of 100 inch-pounds, at temperatures of both 32°F and 72°F.

The impact-resistant aluminum panel shall be the same as required for Type III B reflective sheeting.

The retroreflective sheeting shall be processed and applied to aluminum sign blank materials in accordance with the sheeting manufacturer's instructions. The sheeting shall perform effectively for 3 years. If, within 3 years from the date of acceptance, the sheeting has deteriorated due to natural causes to the extent that (1) the sign is ineffective for its intended purpose when viewed from a moving vehicle under normal day or night driving conditions by a driver with normal vision; or (2) the coefficient of retroreflection, after cleaning, is less than 400 for white and 150 for orange when measured at 0.2-degree observation and -4-degree entrance at 90 degree rotation; new sheeting will be furnished and installed by the CONTRACTOR.

G. Fluorescent Orange Wide Angle Prismatic Retroreflective Sheeting. The sheeting shall consist of prismatic lenses formed in a transparent fluorescent orange synthetic resin, sealed, and backed with an aggressive pressure-sensitive adhesive protected by a removable liner. The sheeting shall have a smooth surface with distinctive interlocking diamond seal pattern and orientation marks visible from the face.

MINIMUM COEFFICIENT OF RETROREFLECTION
(Candelas Per Foot-Candle Per Square Foot)
90º Rotation Angle

Observation Angle (Deg.)	Entrance Angle (Deg.)	Orange
0.2	-4	200
0.2	+30	120
0.2	+50	50
0.5	-4	80
0.5	+30	50
0.5	+50	20

Daytime color and maximum spectral radiance factor (peak reflectance) shall be determined in accordance with ASTM E991 using a Hunter Lab Labscan 6000 0/45.

COLOR SPECIFICATION LIMITS (DAYTIME)

Color	1		2		3		4		**Reflectance Limit Y (%)**	
	X	Y	X	Y	X	Y	X	Y	min	max.
Orange (new)	.583	.416	.523	.396	.560	.360	.631	.369	30	–
Orange (weathered)	.583	.416	.523	.396	.560	.360	.631	.369	20	–

Nighttime color shall be determined in accordance with ASTM E811 and calculated in the u,' v' coordinate system in accordance with ASTM E308. Sheeting shall be measured at 0.33D observation and -4° entrance at 90-degree rotation.

COLOR SPECIFICATION LIMITS (NIGHTTIME)

Color	1		2		3		4	
	U'	V'	U'	V'	U'	V'	U'	V'
Orange (new) (weathered)	.583	.416	.523	.396	.560	.360	.631	.369

The sheeting impact resistance requirements shall be the same as in Subsection 1212-2 F.

The impact-resistant aluminum panel shall be the same as that required in Subsection 1212-2 F.

The field performance requirements shall be the same as specified in Subsection 1212-2 F, except that coefficient of refraction for the fluorescent sheeting can be no lower than 100.

1212-7 PIGMENTED PLASTIC FILM, PRESSURE-SENSITIVE ADHESIVE

A. Description. This material shall be flexible, pigmented plastic film completely precoated with a pressure-sensitive adhesive. The adhesive shall be protected by a treated paper liner which shall be removable without soaking in water or other solvents. The material shall be available in colors listed in Subsection 1212-3 B.7.

B. Material Requirements. Material requirements shall be as follows:

1. **Thickness.** The thickness of the plastic film with adhesive shall be a minimum of 0.003 inch and a maximum of 0.0045 inch.

2. **Film.** The unapplied and applied film shall be readily processed and shall ensure adequate adhesion with process or printed inks recommended by the manufacturer.

3. **Flexibility.** The material shall be sufficiently flexible to permit application over and conformance to moderately contoured surfaces.

4. **Gloss.** The film shall have a minimum initial 60-degree gloss value of 35 when tested according to ASTM D523, measuring at least three portions of the film to obtain uniformity.

5. **Adhesive.** The precoated adhesive shall form a durable bond to smooth, clean, corrosion-resistant and weather-resistant surface; shall be of uniform thickness; shall be non-corrosive to applied surfaces; and shall have no staining effect on the film. The adhesive shall adhere securely at temperatures of -30°F to +200°F; shall not crack, chip, or peel voluntarily; nor shall it be removed from the panel in one piece without the aid of a tool.

6. **Sunlight Resistance.** There shall be no effect on the adhesive tack or performance following exposure of the adhesive face under a new General Electric RS Sunlamp for a period of 6 hours at a distance of 8 inches.

7. **Exterior Exposure.** The unprocessed material shall withstand the years of exposure, listed below by color, in a vertical, south-facing, exterior exposure in Texas. During the exposure, the unprocessed material shall show no appreciable discoloration, cracking, crazing, blistering, delamination, or loss of adhesion. A slight amount of chalking is permissible. The CONTRACTOR shall furnish a written assurance from the manufacturer that the sheeting will meet the requirements of the following table and be effective for its intended purpose when viewed from a vehicle, throughout the satisfactory performance life:

Color	Satisfactory Performance Life
White	7 years
Black	7 years
Yellow	5 years
Aluminum	5 years
Insignia Blue	5 years
Transparent	5 years
Red	3 years
Gold	3 years

The CONTRACTOR shall secure from the manufacturer all warranties and guarantees with respect to materials, parts, workmanship, or performance which the products covered by the proposal bear, and include these warranties and guarantees with the certification.

8. **Fungus Growth.** The film shall not support fungus growth.

9. **Plastic Lettering.** Plastic lettering film as furnished in rolls, sheets, or letters shall be free from ragged edges, cracks, blisters, streaks, foreign matter, or other surface imperfections which would make it unsuitable for usage. The plastic lettering film shall be capable of being readily cut with scissors, knives, blades, or shears without cracking, crazing, checking, or flaking.

1212-8 LETTERS, NUMERALS, SYMBOLS, AND BORDERS FOR PANEL SIGNS

A. General. All letters, numerals, symbols, and borders shall meet the requirements shown in the contract and the *MUTCD*.

All letters, numerals, symbols, and borders shall have a regular outline and be clean-cut and sharp. All letters, numerals, and symbols shall have a continuous stroke and border. In special cases, symbols may have a broken stroke and border, provided they do not exceed more than 2 increments and that they are necessary for manufacturer's fabrication.

Blind rivets used for mounting shall conform to the plans and shall extend past the back of the sign backing for a minimum distance of 1/8 inch. They shall be made of non-rust material.

B. Demountable Reflectorized Cutout Letters, Numerals, Symbols, and Borders. Demountable reflectorized cutout type letters, numerals, symbols, and borders shall consist of adhesive-coated reflective sheeting permanently adhered to a flat sheet aluminum backing. Type III and IV reflective sheeting meeting Subsection 1212-2 shall be used.

The reflective sheeting shall be applied to the properly prepared aluminum with the equipment and in the manner prescribed by the sheeting manufacturer.

Letters, numerals, symbols, and border backing shall be aluminum alloy meeting ASTM B209, Alloy 6061-T6 or 5052-H38 with mill finish and of the thickness shown on the plans. Aluminum backing shall be properly degreased and etched as specified in Subsection 1212-1 B.

Mounting holes shall be uniformly spaced around the letters or characters and shall have the edge clearance shown in the contract. The spacing shall be determined by the character size and shape. Mounting holes shall be spaced no more than 8 inches on centers, except for characters of 8 inches high or less. For characters 8 inches high or less, the maximum spacing of mounting holes shall be 4 inches. Mounting holes shall be drilled by the manufacturer.

Each letter, numeral, symbol, and border shall be offset, unless otherwise specified, as shown on the plans with aluminum shim spacers meeting ASTM B221, Alloy 2024. Finish of the letters, numerals, symbols, and borders shall be done with material and in the manner specified by the manufacturer of the reflective sheeting.

C. Demountable Cutout Letters, Symbols, Numerals, and Borders Using Acrylic Plastic Reflectors. Demountable cutout letters, symbols, numerals, and borders using acrylic plastic reflectors shall consist of acrylic plastic prismatic reflectors supported by embossed aluminum frames.

1. Acrylic Plastic Reflectors. The reflectors shall meet the following:

a. Material. The material shall be an acrylic plastic made from methyl methacrylate. The reflector shall have a clean, transparent face (lens). The back shall be opaque and shall be made of identical material to the lens. It shall be fused to the lens around the entire perimeter to form a permanent seal against dust, water, and water vapor.

The lens shall have a smooth, front surface free of indentation or projection other than identification. The rear surface of the lens shall have a prismatic configuration to effect a total internal reflection of light. The lens shall be colorless.

b. Optical Requirements. The optical requirements shall be tested as specified in Subsection 1212-6 B.2.c. with the following minimum values:

Observation Angle Degrees	Entrance Angle Degrees	Specific Brightness Candelas/Ft. Candle/Sq. Ft.
0.2°	0°	3.0
0.2°	20°	1.2

c. Durability. The reflectors shall conform to Subsection 1212-6 B.2.d.

d. Corrosion. The assembled cutout letter, symbol, or accessory shall withstand the combined corrosion test of ASTM B117.

2. Embossed Aluminum Frames. All letters, numerals, and symbols shall be fabricated from aluminum alloy meeting ASTM B209, Alloy 3003 sheet aluminum. Border strips shall be fabricated from aluminum alloy meeting ASTM B211, Alloy 6061-T6 sheet aluminum of the thickness shown on the plans. Fabrication requirements are as follows:

Mounting holes shall be provided within frames to permit the use of non-rust screws, rivets, or other common non-rust fasteners.

The size and spacing of reflector holes shall afford maximum night legibility and visibility to the finished cutout figures.

After metal fabrication has been completed, the finish process shall be as follows:

Aluminum frames shall be degreased, etched, and given an alkaline chrome surface treatment and then rinsed and dried before prefiring.

The pre-prepared frames shall be sprayed with enamel slip consisting of a finely ground water-suspended glass frit, pigment, suspension agent, and opacifiers. Firing temperatures range from 930°F to 1,010°F depending on frit formulation, alloy, etc. Oven temperature shall be controlled ±1°F. Temperatures for baking on enamel shall be as specified by the manufacturer of the enamel slip.

D. Direct-Applied Type IIIA and IIIB Reflective Sheeting Letters, Numerals, Symbols, and Borders.

1. General. The letters, numerals, symbols, and borders shall consist of adhesive-coated, pressure-sensitive reflective sheeting meeting Subsection 1212-2. The material used for fabrication of letters, numerals, symbols, borders, and route markers shall be sampled and tested as specified for other reflective materials.

2. Fabrication. Letters, numerals, symbols, and borders shall be cut from reflective sheeting and shall have a smooth, regular outline, free from ragged or torn edges. Letters, numerals, and symbols having interior or exterior corners shall have these corners cut with a smooth 3/16-inch ±1/16-inch radius. Border

corners and strips shall have no corner radius. Route markers used in conjunction with direct-applied letters shall be applied to 0.040 aluminum backing and shall be attached with blind rivets or other common non-rust fasteners. Fasteners shall be placed a maximum of 6 inches on center around the perimeter of the shield. The reflective sheeting shall be of the same type specified for the letters. All sheeting, numerals, symbols, and borders shall show careful workmanship and shall be of regular outline.

1212-9 POSTS AND HARDWARE FOR SIGNS

A. Hardware for Signs.

1. **General.** All aluminum bolts, nuts, U-bolts, lock washers, and washers shall be given at least a 0.002-inch anodic coating and chromate seal. All steel bolts, nuts, U-bolts, lock washers, and washers shall be galvanized steel meeting ASTM A153.

   Use of substitute alloys in lieu of the alloy specified for various items of "Hardware for Signs" may be approved by the ENGINEER upon submission of documented evidence that the proposed substitute alloy has applicable qualities equal to or superior to the designated alloy.

2. **Bolts.** Aluminum panel bolts, etc., shall be fabricated of aluminum alloy meeting ASTM B211, Alloy 2024-T4 or 6061-T6.

   Steel panel bolts, machine bolts, etc., shall meet ASTM A307.

3. **Nuts.** Aluminum nuts, hex nuts, vandal-resistant nuts shall be fabricated of aluminum alloy meeting ASTM B211, Alloy 6061-T6.

   Steel hex nuts shall meet ASTM A307.

   In lieu of using torque wrenches to obtain the required torques for fuse joints and slip base used in the breakaway system, the Torque Control Nut System may be used. This system shall provide automatic torque control, consistently-controlled preload, vibration resistance, high strength, easy installation, simple inspection, and resistance to weather effects.

   The torque control nut shall be designed to mate with standard high-strength bolts meeting ASTM A325. The minimum stripping strength of the threads shall be equal to or shall exceed the strength level of the mating bolts.

   The self-locking quality of resistance to loosening shall meet the tests in Federal Specification MIL-N-25027 and shall be installed according to the manufacturer's recommendations.

4. **Washers.** Aluminum lock washers shall be fabricated of aluminum alloy meeting ASTM B209, Alloy 7075-T6.

   Aluminum flat washers shall be fabricated of aluminum alloy meeting ASTM B209, Alloy 2024-T4.

   Steel lock washers shall be fabricated of steel meeting ANSI B27.1.

   Steel flat washers shall be fabricated of steel meeting ASTM A307.

   Plastic washers shall be fabricated to the sheeting manufacturer's specifications.

5. **Stringers.** Aluminum stringers shall be fabricated to plan dimensions and made of aluminum alloy meeting ASTM B221, Alloy 6061-T6 or ASTM B308, Alloy 6061-T6.

   Steel stringers shall be fabricated to plan dimensions and made of steel meeting ASTM A36.

6. **Aluminum Alloy Castings.** Brackets, post caps, and fuse plates may be either permanent mold castings or sand castings.

   Aluminum alloy permanent mold castings shall meet ASTM B108, Alloy SG70A-F or SG80A-T6.

   Aluminum alloy sand castings shall meet ASTM B26, Alloy SG70A-F or SG70A-T6.

7. **Steel Castings.** Brackets, post caps, and fuse plates shall meet AASHTO M103, Grade 65-35.

8. **U-Bolts.** Aluminum U-bolts shall be fabricated of aluminum alloy meeting ASTM B211, Alloy 2017-T4.

   Steel U-bolts shall be fabricated of steel meeting ASTM A307.

9. **Anchor Bolts.** Anchor bolts, anchor studs, nuts, and washers shall be fabricated of steel meeting ASTM A307.

   All nuts, washers, and anchor studs shall be galvanized steel meeting ASTM A153.

   The hex bar shall be tapped with U.S. Steel. Standard right thread, both ends, and made of steel meeting ASTM A307.

10. **Attachment Clip and Plate.** Attachment clip and plate for attachment of steel panels shall be fabricated as shown in the contract, and made of steel meeting ASTM A283 and galvanized in conformance to ASTM A153.

11. **Fuse Joint Bolts.** Aluminum fuse plate bolts and washers shall be fabricated from aluminum meeting ASTM B211, Alloy 2024-T4.

    Steel fuse plate bolts and washers shall be fabricated from steel meeting ASTM A325, and nuts shall be of the capacity to develop the bolt strength. Bolts, nuts, and washers shall be galvanized according to ASTM A153.

12. **Breakaway Base Bolts.** All breakaway base bolts shall have bolts and washers fabricated from steel meeting ASTM A325, and nuts shall be of the capacity to develop the bolt strength. Bolts, nuts, and washers shall be galvanized according to ASTM A153.

B. Posts.

1. **General.** Tubular post size, length, and weight shall be as shown in the contract for each type of sign.

   Welding on aluminum shall be done according to Section 5, and welding on galvanized steel shall be done according to Section 4 of the AASHTO Standard Specifications for Structural Supports for Highway Signs, Luminaires, and Traffic Signals.

   All markings on posts, signs, casting, etc., shall be removed after erection.

2. **Aluminum Tubular Posts and Accessories.**

Material	**Specification**
Drawn Seamless Tubes and Extruded Round or Square Tubes	ASTM B210, Alloy 6061-T6 or ASTM B241, Alloy 6061-T6
Extruded Structural Shapes	ASTM B221, alloy 6061-T6
Breakaway Bases	ASTM B209, Alloy 6061-T6
Fuse Plates	ASTM B209. Alloy 6061-T6
Fuse Plate Bolts and Washers	ASTM B211, Alloy 2024-T6

3. **Steel (Galvanized) Posts and Accessories.**

Material	**Specification**

Standard Steel Pipe	AASHTO M111, M183, and M232
Breakaway Bases	AASHTO M183 and M232
Fuse Plates	AASHTO M183 and M232

4. **Square Steel Telescoping Tubular Posts.** Tubing shall be of the size and shape shown in the contract and shall meet the following requirements:

   a. **Material.** Steel posts shall conform to the Standard Specifications for a Grade 55 hot rolled carbon sheet steel, structural quality, ASTM designation A570.

   b. **Shape.** The cross section of the post shall be square tube formed of 12-gauge (.105 U.S. Steel. gauge) and 10-gauge (.135 U.S.S. gauge) steel, carefully rolled to size and shall be welded directly in the corner by high frequency resistance welding and externally scarfed to agree with corner radii.

   c. **Finish.** Signposts shall be manufactured from hot-dipped galvanized steel conforming to ASTM specification A653, designation G90. The corner weld shall be zinc coated after scarfing operation. The steel shall be coated with a chromate conversion coating and a clear organic polymer topcoat. Both the interior and the exterior of the post shall be galvanized.

   d. **Cross Section.** Perforated signposts shall be one or more of the following sizes:

Size	U.S.S. Gauge	Weight (lbs./foot)
1½" x 1 ½"	12	1.70
2" x 2"	12	2.42
2¼" x 2¼"	12	2.77
2½" x 2½"	12	3.14
$2^{3}/_{16}$" x $2^{3}/_{16}$"	10	3.43
2 ½" x 2½"	10	4.01

   e. **Holes.** Holes shall be 7/16 ±1/64 inches in diameter on 1-inch centers on all 4 sides down the entire length of the post. The holes shall be on centerline of each side in true alignment and opposite each other directly and diagonally.

   f. **Length.** The length of each post shall have a permissible length tolerance of ±1/4 inch.

   g. **Telescoping Properties.** The finished posts shall be straight and have a smooth, uniform finish. It shall be possible to telescope all consecutive sizes of square tubes freely and for not less than 10 feet of their length without the necessity of matching any particular face to any other face. All holes and ends shall be free from burrs and ends shall be cut square.

h. Tolerances.

(1) Tolerances on outside sizes:

Nominal Outside Dimensions	Outside Tolerances at All Sides at Corners
1½" x 1½"	±.006"
2" x 2"	±.008"
2¼" x 2¼"	±.010"
2½" x 2½"	±.010"
$2^{3}/_{16}$ " x $2^{3}/_{16}$ "	±.010"

Note: Measurements from outside dimensions shall be made at least 2 inches from the end of the tube.

(2) Wall Thickness Tolerances. Permissible variation in wall thickness is +.011" - .008."

(3) Convexity and Concavity. Measured in the center of the flat sides, tolerance in ±.010," determined at the corner.

(4) Squareness of Sides and Twist.

Nominal Outside Dimensions	Squareness Tolerance	Twist Permissible in 3' Length
1½" x 1½"	±.009"	.050"
2" x 2"	±.012"	.062"
2¼" x 2¼"	±.014"	.062"
2½" x 2½"	±.015"	.075"
$2^{3}/_{16}$ " x $2^{3}/_{16}$ "	±.014"	.062"

Note: A sample shall be considered to fail if its sides are not 90 degrees to each other within the squareness tolerance listed above.

(5) Straight Tolerance. Permissible variation in straightness is one-sixth of an inch in 3 feet.

(6) Corner Radii. Standard outside corner radius shall be 5/32 of an inch ±1/64 inch.

i. Installation. The square end of the post shall not be modified or pointed, but shall be capable of being driven into the ground with the use of an approved driving cap.

j. Slip Base Assembly. The design and the construction of the slip base assembly shall be as shown on the Plans. The assembly shall be as

manufactured by Unistrut Corporation or approved equivalent. The manufacturer shall certify that the chemistry, geometry, and mechanical properties are the same as those used in the tests and that the assembly will meet FHWA change-in-velocity requirements.

5. **Flange Channel and Accessories.** Flange channel shall be of the size and shape specified and shall meet the following requirements:

   a. **Anchor Plates.** The flange channel and anchor plates shall be rolled from high strength, hot-rolled steel conforming to ASTM A499, Grade 60, 60,000 psi minimum yield strength and 90,000 psi minimum ultimate strength.

   b. **Safety Retainer-Spacer Strap.** The straps shall be of the size and shape specified and shall be fabricated from steel meeting AISI 1020.

   c. **Nuts and Bolts.** The bolts shall be the size specified and shall be fabricated from steel meeting ASTM A354, Grade BD, case-hardened. The nuts shall meet AASHTO M291, Grade DH, and lock washers shall be heavy-duty external type. Nuts and bolts shall be cadmium plated ASTM A165, Type 05, except when using clear chromate.

   d. **Fabrication.** The finished post shall be machine straightened and have a uniform finish, free from defects affecting its strength, durability, or appearance. All holes and sheared ends shall be commercially free from burrs.

   Sign posts and stringers shall be punched on the centerline with 7/16-inch diameter holes on 1-inch centers for the entire length.

   Base posts shall be punched on centerline with a minimum of twelve 7/16-inch diameter holes on 1-inch centers. The first hole shall be 1-inch from the top. The bottom of the post shall be pointed for easy installation.

   The sign post, base posts, retainer-spacer, and anchor plates shall be galvanized according to AASHTO M232.

6. **Structural Steel Posts.** Structural steel posts shall be fabricated from material conforming to Section 834.01A and shall be galvanized according to Section 854 after fabrication.

1212-10 DELINEATORS

A. Posts. Steel posts shall meet ASTM A702.

Steel posts shall be galvanized according to AASHTO M111 or be aluminum posts fabricated from aluminum alloy meeting ASTM B308, Alloy 6061-T6. Posts shall have holes at 1-inch spacing the entire length of the post.

B. Reflectors.

1. **Reflective Sheeting.** Type III reflective sheeting for delineators shall be white or yellow adhesive-coated, permanently adhered to aluminum or galvanized steel.

   The reflective sheeting shall meet Subsection 1212-2. Backing material shall meet Subsection 1212-1.

   The finished reflector shall show careful workmanship; be free of burrs, scratches, or damaged reflective sheeting; and have essentially a flat surface.

2. **Acrylic Plastic.**

   a. **Metal Parts.** The housing shall be .020-inch ASTM B209 3003-H14 or 5052-0 sheet aluminum formed to approximately 3 ¼ inches in diameter and .235 inch in depth to retain the acrylic reflector. The housing shall be provided with 4 embossed circular reinforcement ribs and marked with the manufacturer's name and part number.

      An aluminum grommet with a 3/16-inch inside diameter shall be expanded within the reflector mounting hole.

   b. **Acrylic Plastic.** The reflector shall be an acrylic plastic manufactured from methyl methacrylate. The reflector shall consist of a clear and transparent plastic face, with a minimum of 7 square inches of reflective area, referred to as the lens. It shall have a heat-sealable, plastic-coated, metallic foil back fused to the lens under heat and pressure around the entire perimeter of the lens and the central mounting hole to form a unit permanently sealed against dust, water, and water vapor. The reflector shall be colorless, yellow, or red.

      The lens shall consist of a smooth front surface free from projection or indentation other than the central mounting hole and identification with a rear surface bearing a prismatic configuration such that it will provide total internal reflection of light.

   c. **Optical Requirements**. The optical requirements shall be as follows:

Color	**Candelas per Foot-Candle per Square Foot Divergence Angle, -01 Degrees**	
	Entrance Angle,	**Deg.**
	0	20
Crystal or Silver	119	47
Yellow	71	28
Red	29	11

The reflex reflector to be tested shall be located 100 feet from a single light source having an effective diameter of 2 inches; the light source shall be operated at approximately normal efficiency. The return light from the reflector shall be measured by a photoelectric photometer having a minimum sensitivity of 1 x 10^{-7} foot candles per mm scale division. The photometer shall have a receiver aperture of 0.5 inch diameter, shielded to eliminate stray light. The distance from light source center to aperture center shall be 2.1 inches for 0.1 degree observation angle. During testing, the reflector shall be spun to average the orientation effect. If a test distance other than 100 feet is used, the source and aperture dimensions and the distance between source and aperture shall be modified in the same proportion as the test distance.

Failure to meet the specific intensity minimum shall constitute failure of the reflector being tested; failure of more than 2 reflectors out of 50 subjected to test shall constitute failure of the lot.

d. Durability. The durability tests shall be as follows:

(1) Seal Test. The following test shall be used to determine if a reflector is adequately sealed against dust and water.

Submerge 50 samples in a water bath at room temperature. Subject the submerged samples to a vacuum of 5 inches for 5 minutes, then examine them for water intake. Failure of more than 2 percent of the number tested shall be cause for rejection.

(2) Heat Resistance Test. Three reflectors shall be tested for 4 hours in a circulating air oven at 175° ± 5°F. The test specimens shall be placed in a horizontal position on a grid or perforated shelf permitting free air circulation. At the conclusion of the test, the samples shall be removed from the oven and permitted to cool in air to room temperature. The samples, after exposure to heat, shall show no significant change in shape and general appearance when compared with unexposed control standards. No failures will be permitted.

C. Fasteners. Aluminum tension pin fasteners shall be an aluminum alloy meeting ASTM B211 Alloy 2024-T4 or 6061-T6. The collar shall be aluminum alloy 509.1212-6 C meeting ASTM B211 Alloy 6061-T67 or 6061-T6. The fasteners shall conform to the contract.

Steel tension pin fasteners shall be a medium carbon steel with a minimum shear strength of 70,000 psi and a minimum tensile strength of 67,500 psi. They shall be galvanized according to AASHTO M232 conforming to the contract.

1212-11 SAMPLING AND TESTING

A. Base Metal. The CONTRACTOR shall furnish to the inspector a certification as specified in Subsection 801-1.

B. Solutions for Cleaning and Etching. The solutions used for cleaning and etching shall not vary more than 10 percent from the manufacturer's recommendation. In addition, all treatment tanks shall be charged with fresh chemicals at least once a year. Titration equipment shall be available for the inspector's use to check the solution strengths.

C. Inspection. All material and finished signs are subject to inspection at the place of manufacture and shall be subject to final inspection at the time of erection. Test panels, 12 inches by 12 inches representative of any stage of production, shall be furnished upon the inspector's request. These panels shall be processed with the regular production run and witnessed by the inspector. All surfaces exposed to weathering shall be free of any defects that may impair the serviceability or detract from the general appearance or color matching of the sign. Signs with any defects or damage that would affect their appearance or serviceability will not be accepted. No repairs shall be made to the face sheet without the approval of the inspector. Signs not conforming in all respects to the requirements will be rejected.

D. Reflective Sheeting. The reflective sheeting shall be certified by the manufacturer that the minimum brightness values previously listed for each color have been met. The color of each type shall be checked by the inspector using the standard color charts as specified.

1. **Reflective Sheeting Flexibility.** The CONTRACTOR shall furnish test specimens for each color of reflective sheeting according to AASHTO M268. Type III and Type IV reflective sheeting shall be applied to a plate as specified in AASHTO M268 and shall be furnished for each color. These test specimens shall be processed with the regular production run and witnessed by the inspector.

2. **Inspection.** The reflective sheeting packages shall be inspected before installation on sign backings. The CONTRACTOR shall provide access by the inspector and shall indicate the roll packages or flat packages to be used on a particular project. The inspector will mark the roll of flat material and note the manufacturer's date. All material used on that project shall be used within one year of this date. If this date is past on the date of inspection, the roll shall be rejected.

E. Torque Control Nuts. The CONTRACTOR shall furnish to the inspector a certification if torque control nuts are chosen for use.

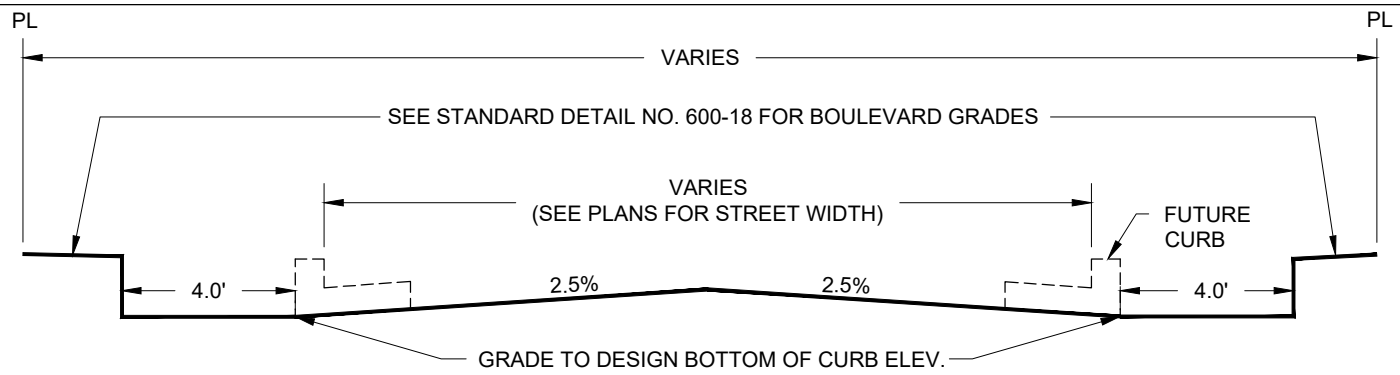

(SEE PLANS FOR R/W WIDTH)

TYPICAL ROUGH GRADING WIDTHS
80' R/W & 48' FACE TO FACE CURB = 57' WIDE ROUGH GRADING
80' R/W & 44' FACE TO FACE CURB = 53' WIDE ROUGH GRADING
66' R/W & 40' FACE TO FACE CURB = 49' WIDE ROUGH GRADING

TYPICAL ROUGH GRADING SECTION

(PRIOR TO UNDERGROUND INSTALLATIONS)

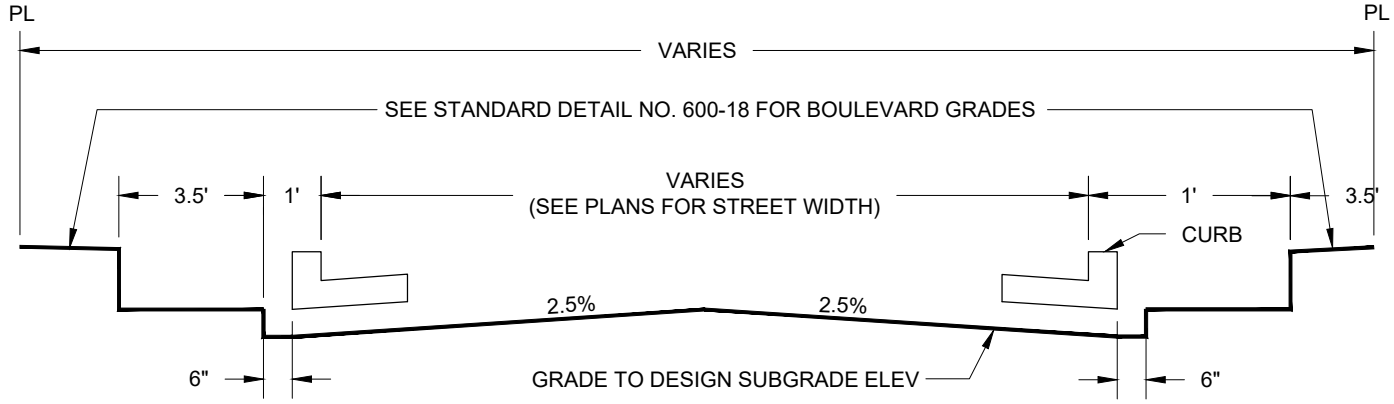

TYPICAL FINAL GRADING SECTION

AFTER UNDERGROUND INSTALLATIONS, GRADING SHALL BE AT DESIGN SUBGRADE ELEVATION

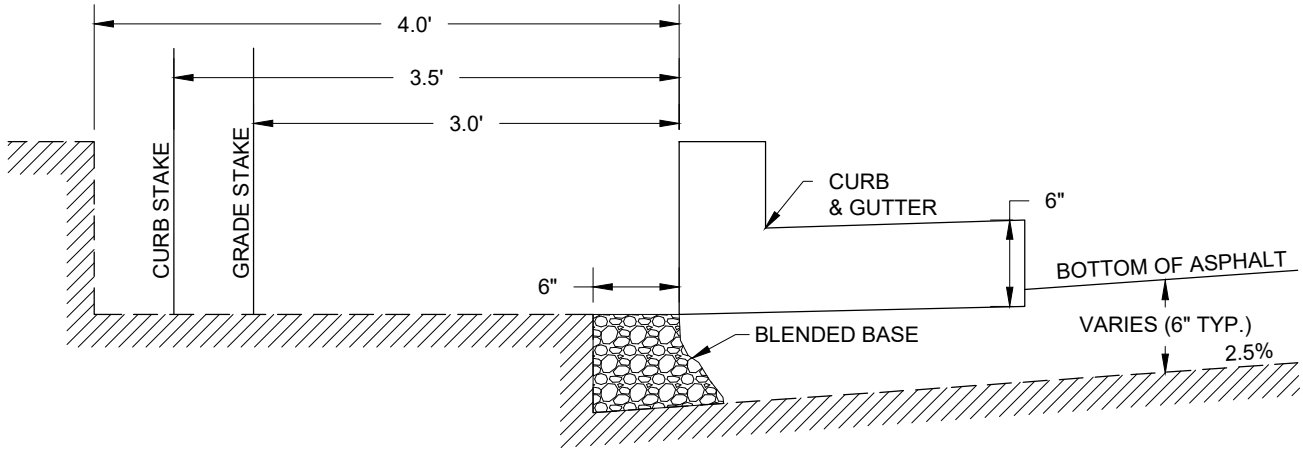

TYPICAL CURB GRADING DETAIL

(AFTER UNDERGROUND INSTALLATIONS)

Bismarck Engineering Department	TYPICAL GRADING SECTIONS	SCALE: Not to Scale DATE: 2/2019	STANDARD DETAIL NO. 200-1

W:\Drawings\Standard Details\200-1 REVISED.dwg, 2/12/2019 10:23:15 AM, aaronr, ANSI full bleed A (8.50 x 11.00 Inches)

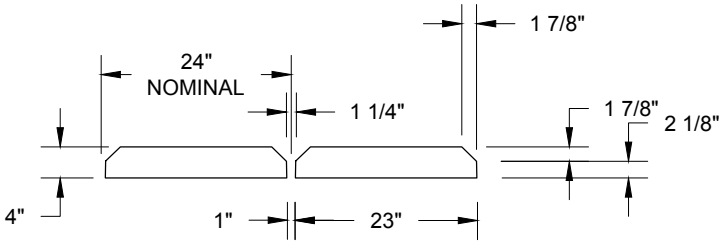

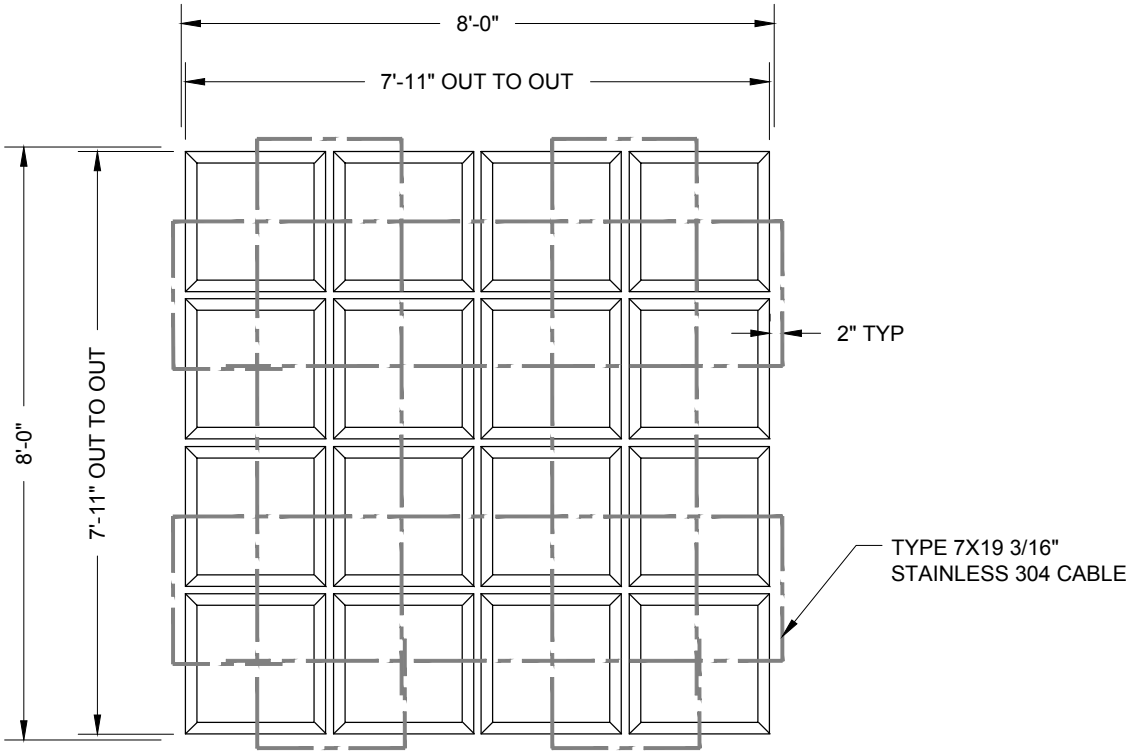

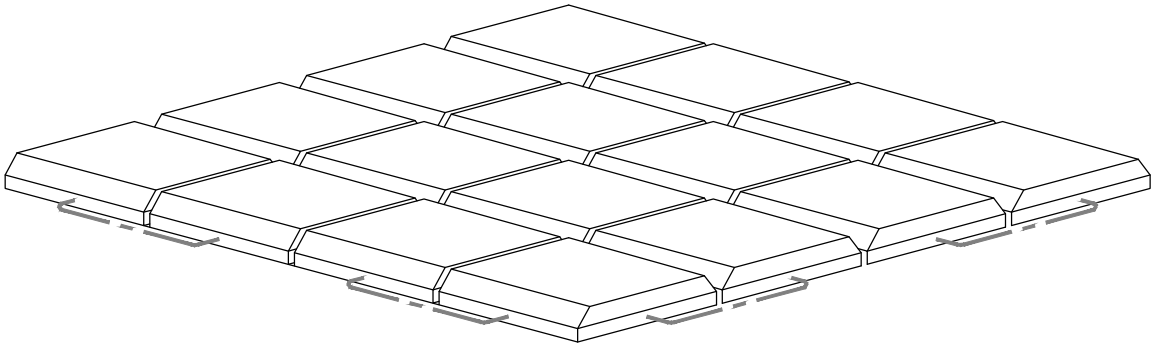

NOTES:
WEIGHT EQUAL TO 40 PSF

GEOTEXTILE FABRIC TO BE ATTACHED TO THE UNDERSIDE OF EACH SECTION WITH A 2'-0" OVERHANG ON TWO SIDES. FABRIC TO BE GEOTEX 801 OR EQUAL.

CONCRETE TO BE 4000 PSI @ 28 DAYS.

Bismarck Engineering Department	**CONCRETE EROSION BLANKETS**	SCALE: Not to Scale DATE: 3/2017	STANDARD DETAIL NO. **205-1**

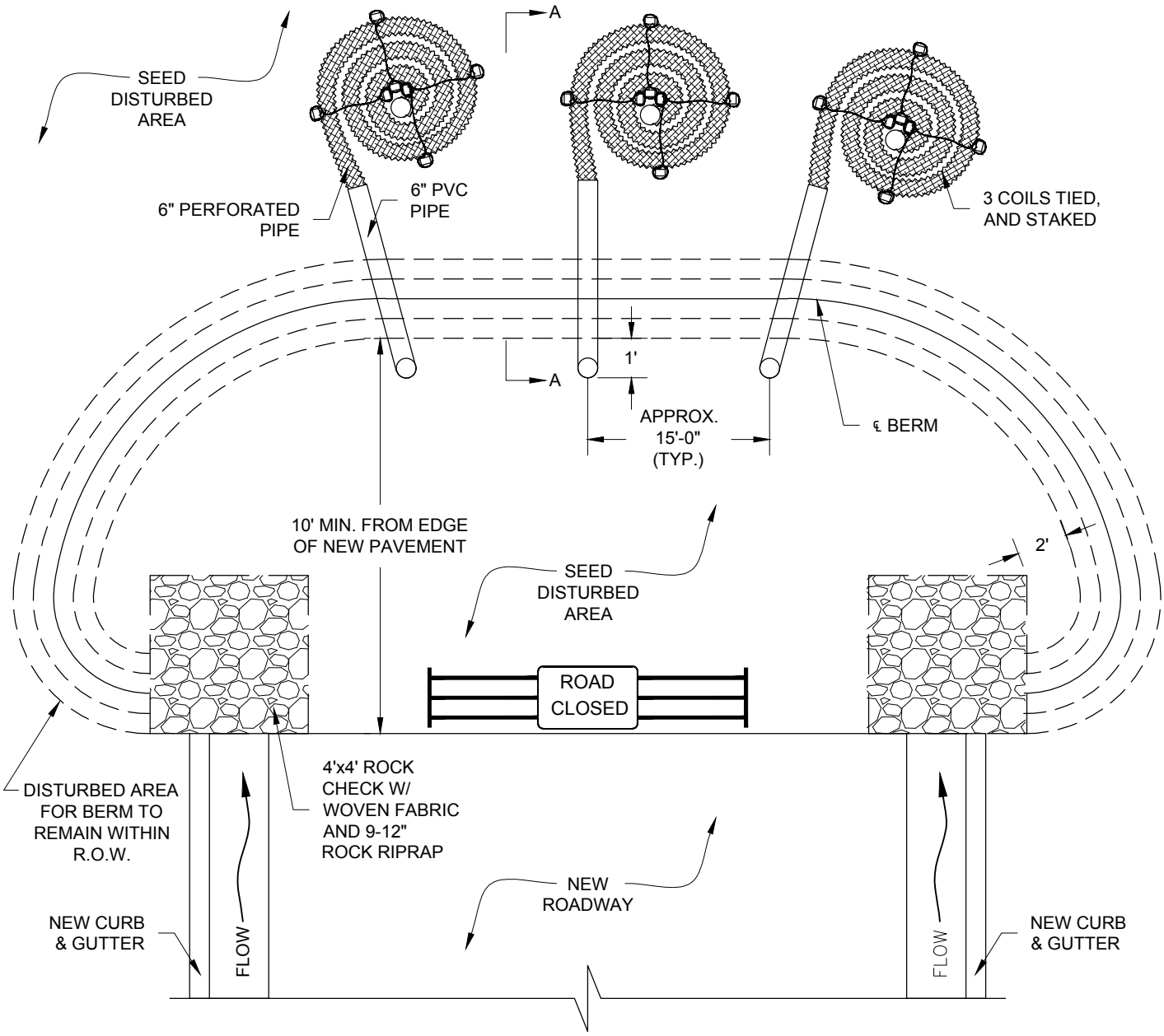

PLAN VIEW

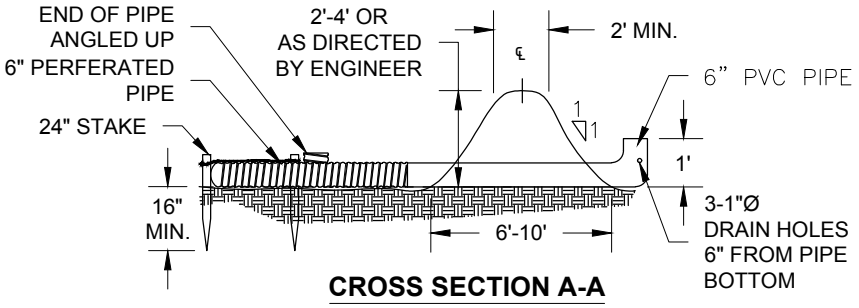

CROSS SECTION A-A

Bismarck Engineering Department	**EROSION CONTROL BERM**	SCALE: Not to Scale DATE: 3/2017	STANDARD DETAIL NO. **205-2**

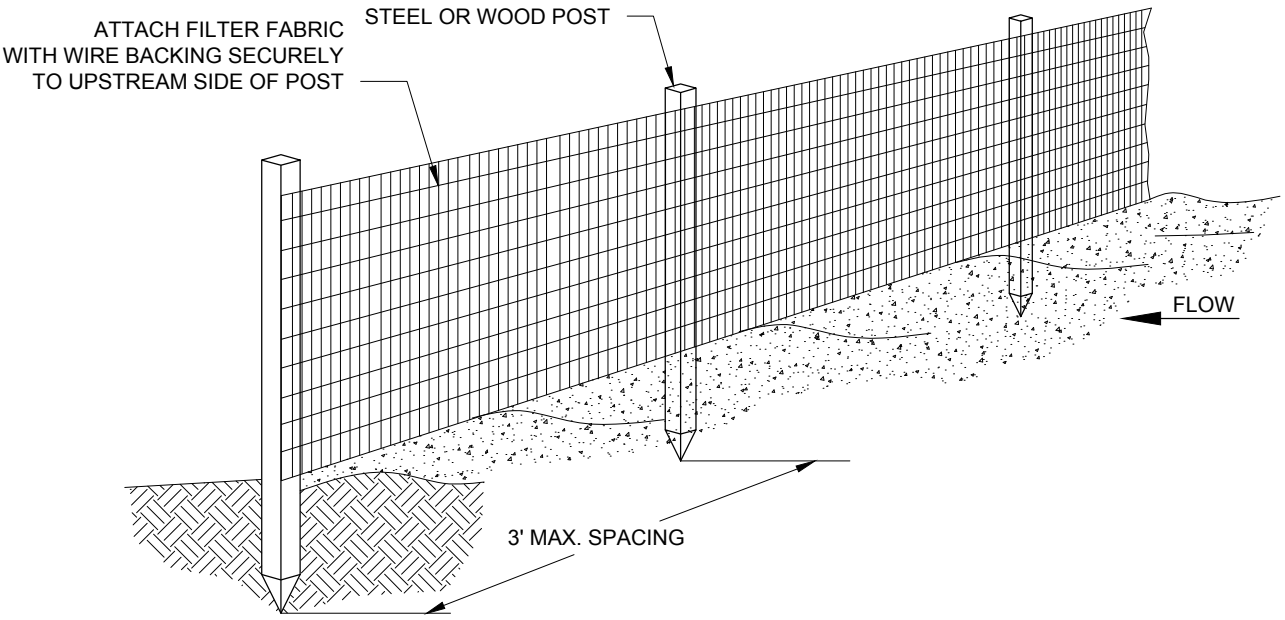

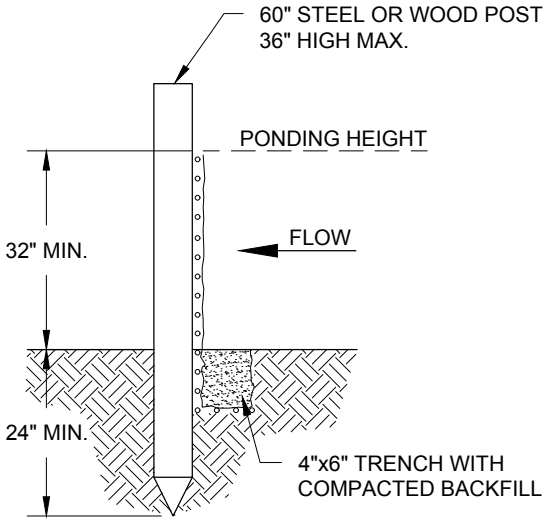

TRENCH DETAIL

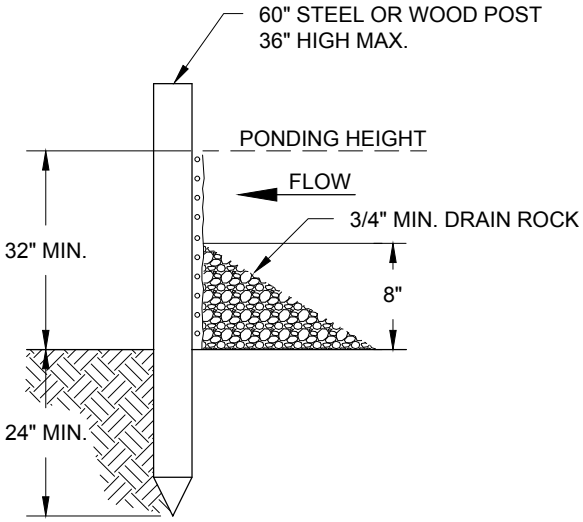

INSTALLATION WITHOUT TRENCH

1. SILT FENCE SHALL BE PLACED ON SLOPE CONTOURS TO MAXIMIZE PONDING EFFICIENCY.
2. INSPECT AND REPAIR FENCE AFTER EACH STORM EVENT AND REMOVE SEDIMENT WHEN NECESSARY.
3. REMOVED SEDIMENT SHALL BE DEPOSITED TO AN AREA THAT WILL NOT CONTRIBUTE SEDIMENT OFF-SITE AND CAN BE PERMANENTLY STABILIZED.

Bismarck Engineering Department	**SILT FENCE WITH WIRE BACK**	SCALE: Not to Scale DATE: 3/2017	STANDARD DETAIL NO. **205-3**

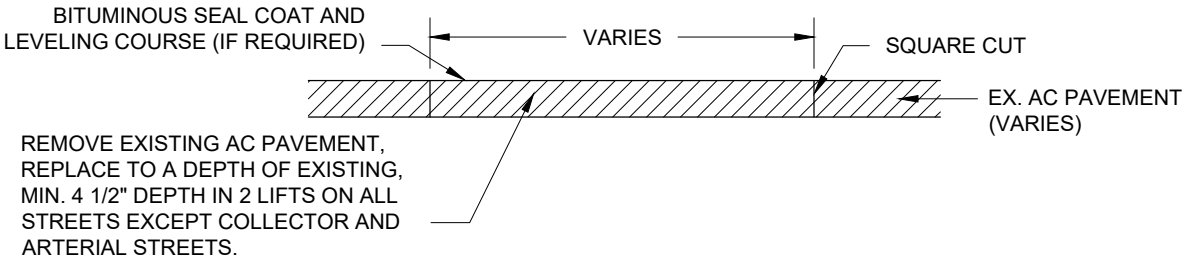

AC PAVEMENT FAILURE

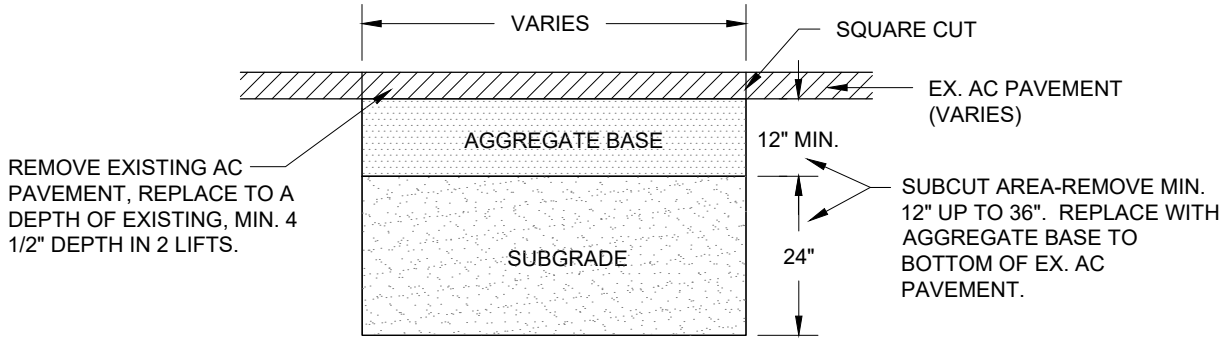

SUBBASE/SUBGRADE FAILURE

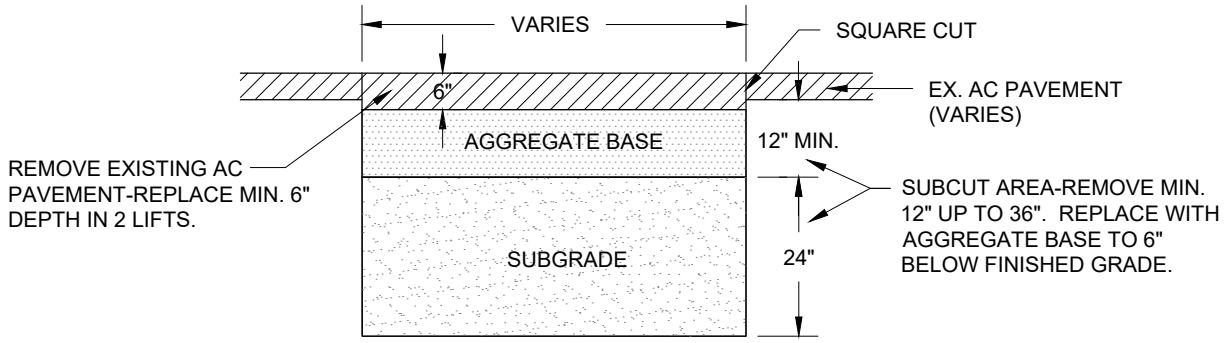

UTILITY CUT PATCH

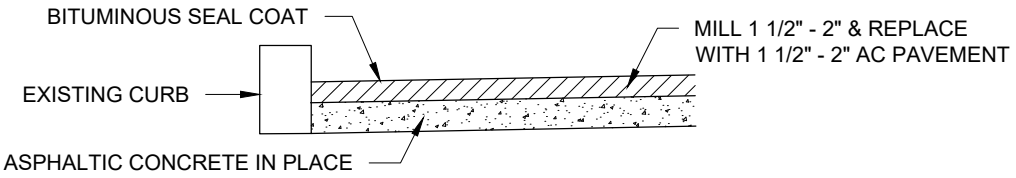

TYPICAL MILL & OVERLAY DETAIL

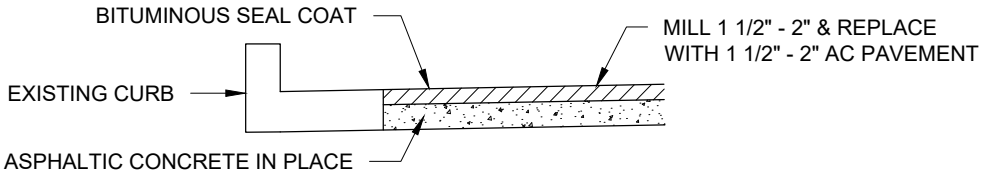

TYPICAL MILL & OVERLAY DETAIL

Bismarck Engineering Department	**AC PATCH**	SCALE: Not to Scale DATE: 3/2019	STANDARD DETAIL NO. **400-1**

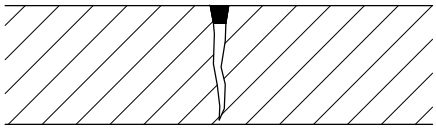

(A) FLUSH-FILL

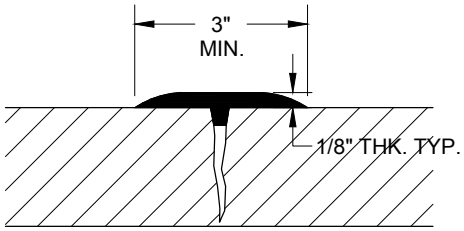

(B) SIMPLE OVERBAND

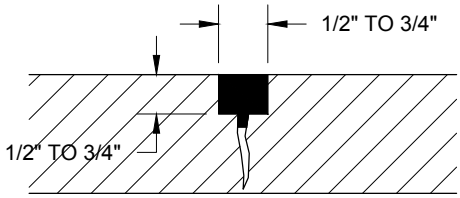

(C) STANDARD RESERVOIR-AND-FLUSH

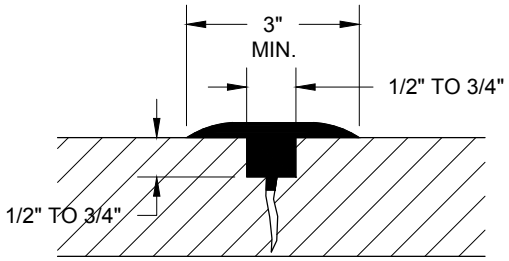

(D) STANDARD RECESSED OVERBAND

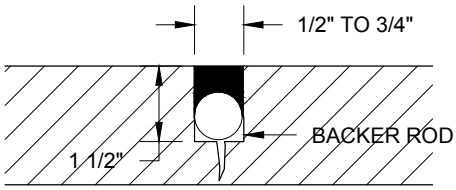

(E) DEEP RESERVOIR-AND-FLUSH
(backer rod)

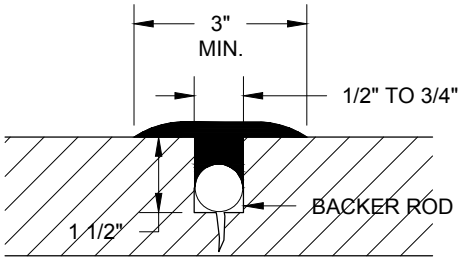

(F) DEEP RECESSED OVERBAND
(backer rod)

Bismarck Engineering Department	**CRACK SEAL**	SCALE: Not to Scale DATE: 3/2017	STANDARD DETAIL NO. **400-2**

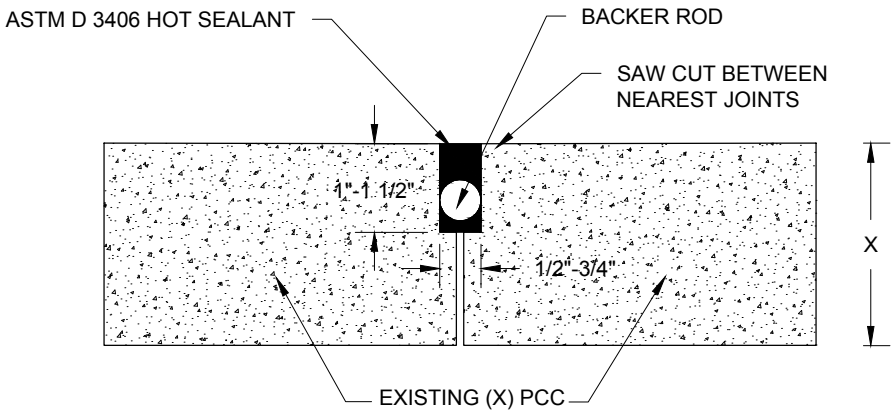

SAW AND SEAL

(Random Crack > 1/2" Width)

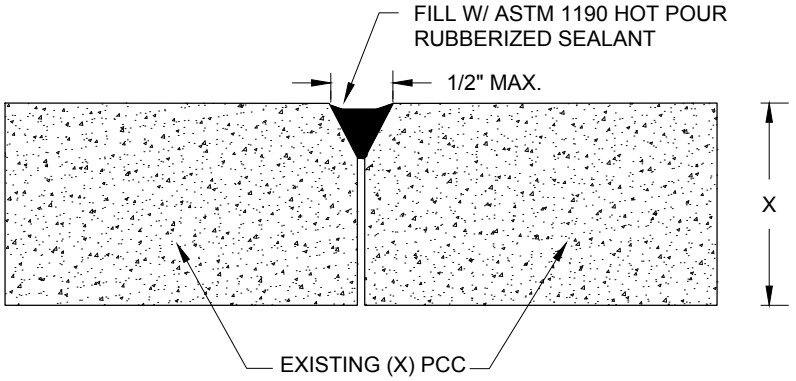

JOINT AND RANDOM CRACK

(1/2" Wide or Less)

METHOD REQUIRED WILL BE MARKED BY THE ENGINEER

Bismarck Engineering Department	**CONCRETE JOINTS**	SCALE: Not to Scale DATE: 3/2017	STANDARD DETAIL NO. **500-1**

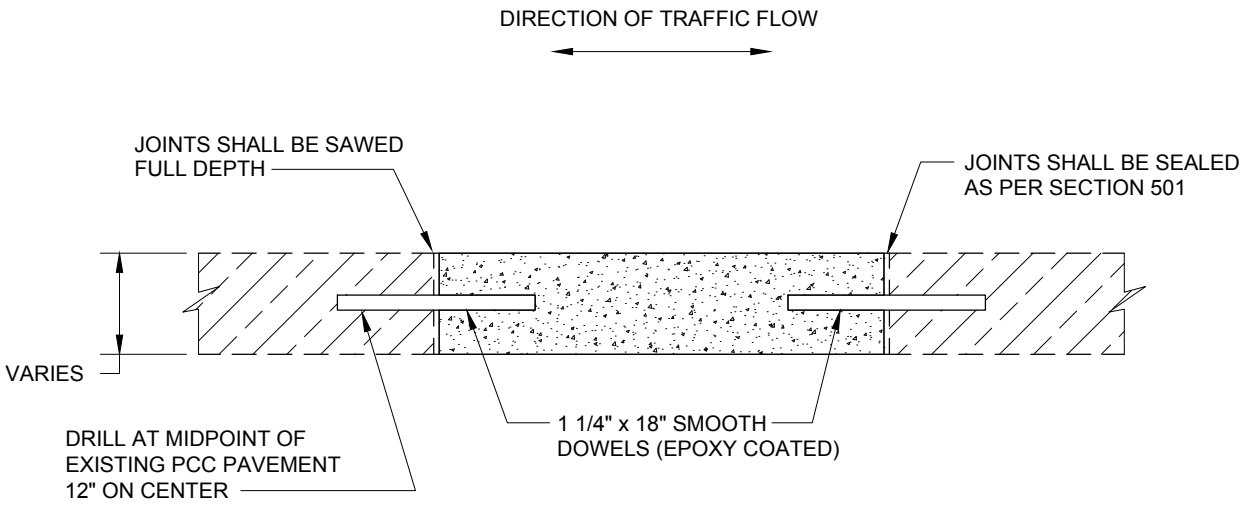

LONGITUDINAL BARS SHALL BE #6 x 18"
DEFORMED BARS @ 2' ON CENTER

Bismarck Engineering Department	**FULL DEPTH SLAB REPAIR**	SCALE: Not to Scale DATE: 3/2017	STANDARD DETAIL NO. **500-2**

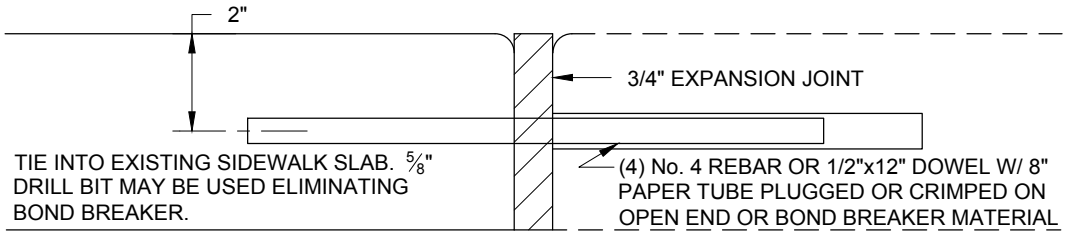

END OF SIDEWALK RUN OR AT EXPANSION JOINT, APPROXIMATELY 100' INTERVALS

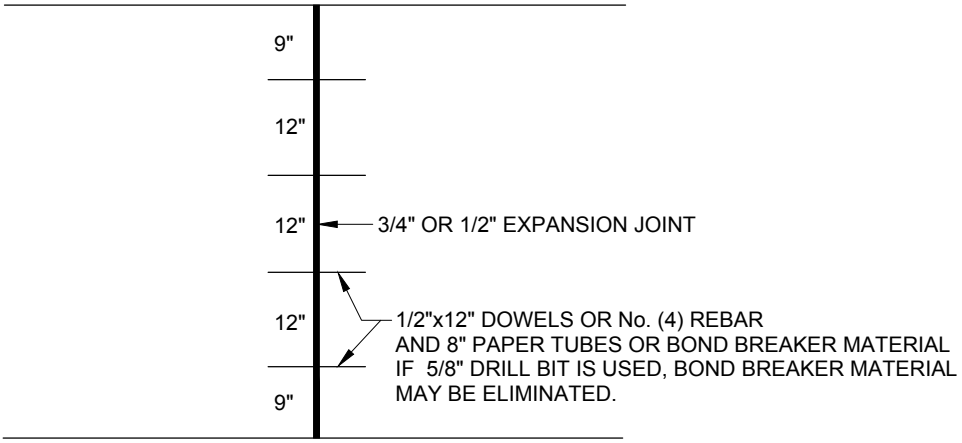

TYPICAL 4.5' WIDE SIDEWALK AT LOT LINES, CROSSWALKS OR 100' INTERVALS

Bismarck Engineering Department	**STANDARD CONCRETE SIDEWALK**	SCALE: Not to Scale DATE: 3/2017	STANDARD DETAIL NO. **600-1**

NOTE NO. 1 CONTRACTION JOINT SCORED 1" DEEP

NOTE NO. 2 LONGITUDINAL CONTRACTION JOINTS SHALL BE SPACED EQUIDISTANT, WITH 7' MAX. SPACING, SCORED 1/2 DEPTH OF CONCRETE.

NOTE NO. 3 SIGN & FLAG POLE HOLDERS, WHERE DESIGNATED BY THE ENGINEER, SHALL BE PLACED 2' BEHIND THE FACE OF THE CURB. ALL GATE VALVES, CURB STOP BOXES, HYDRANTS, TRAFFIC CONTROL FOUNDATIONS AND SIGN POSTS SHALL BE WRAPPED WITH APPROVED EXPANSION JOINT, OR APPROVED BOND BREAKER MATERIAL.

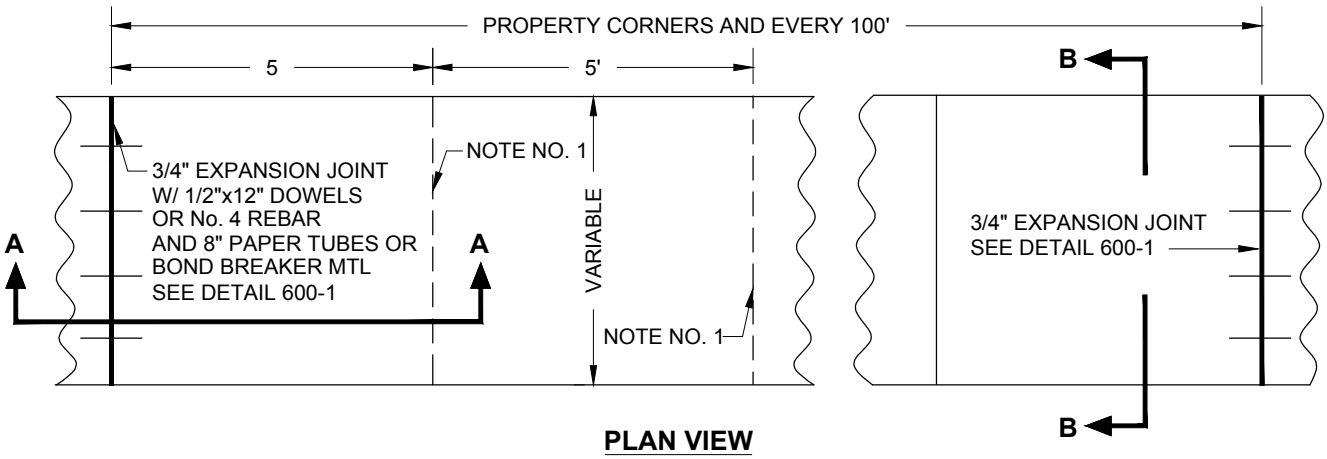

PLAN VIEW

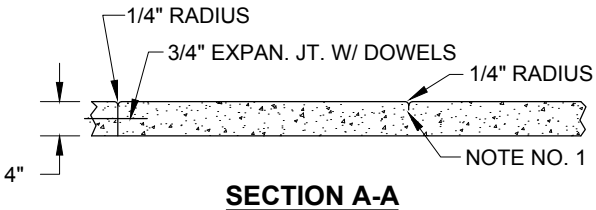

SECTION A-A

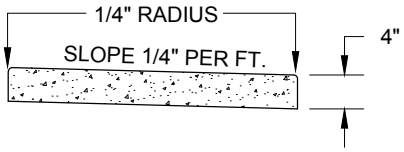

SECTION B-B

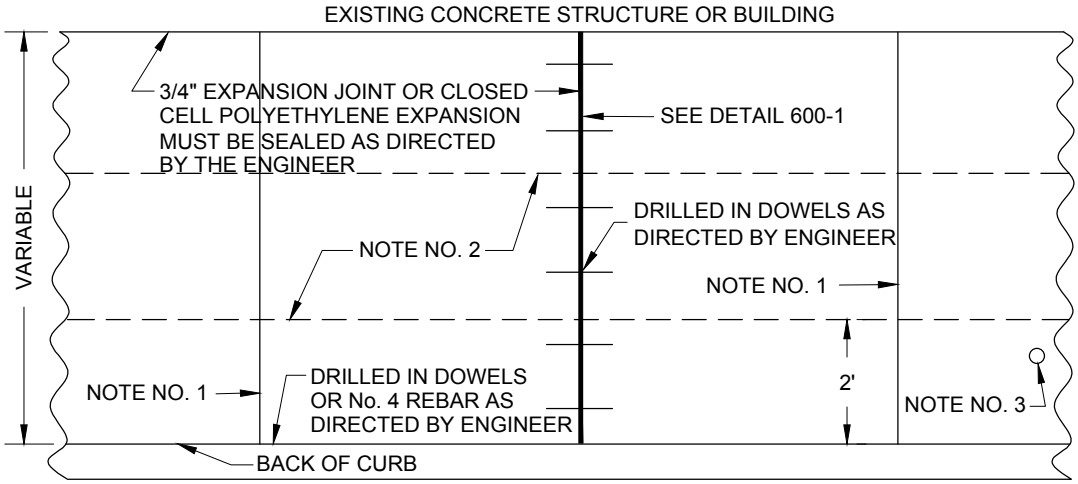

COMMERCIAL SIDEWALK
PLAN VIEW

Bismarck Engineering Department	**COMMERCIAL CONCRETE SIDEWALK**	SCALE: Not to Scale DATE: 3/2017	STANDARD DETAIL NO. **600-2**

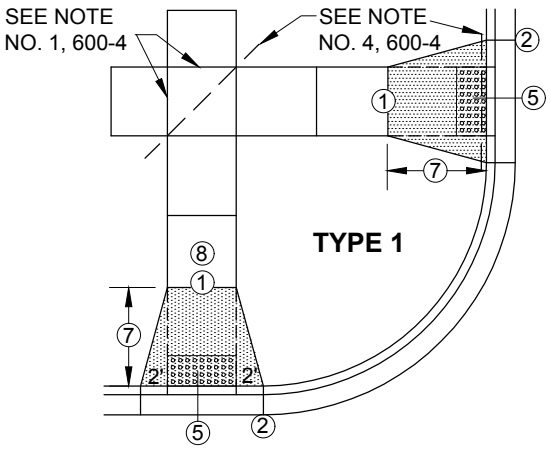

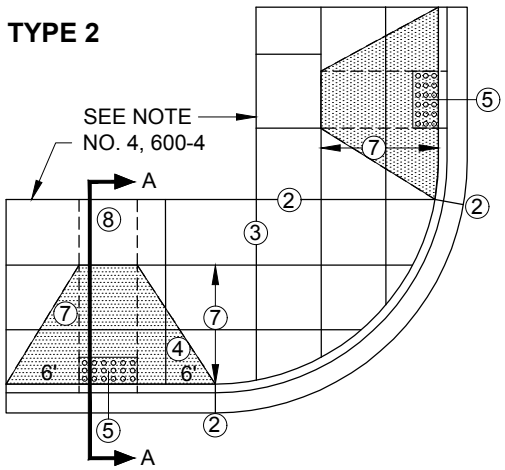

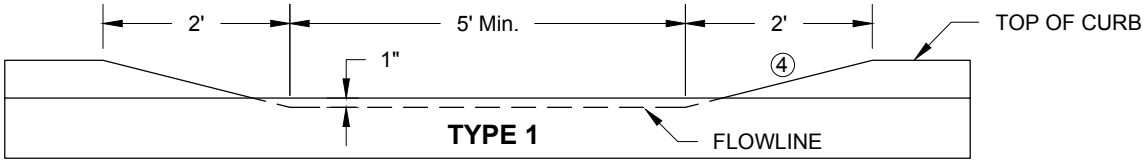

FLARED SIDES OF CURB RAMP

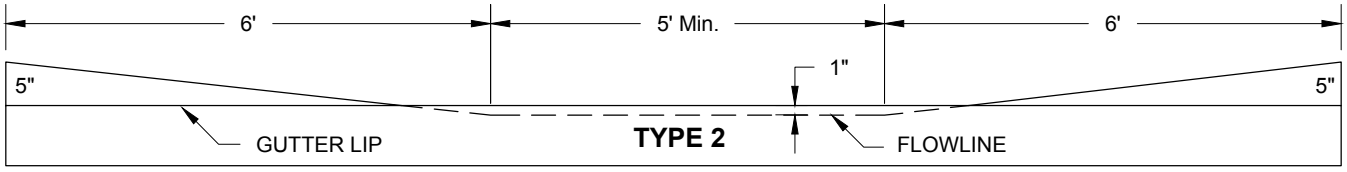

FLARED SIDES OF CURB RAMP

(IF LANDING IS LESS THAN 4', SIDE FLARE SHALL NOT EXCEED 12:1 SLOPE, UNLESS APPROVED)

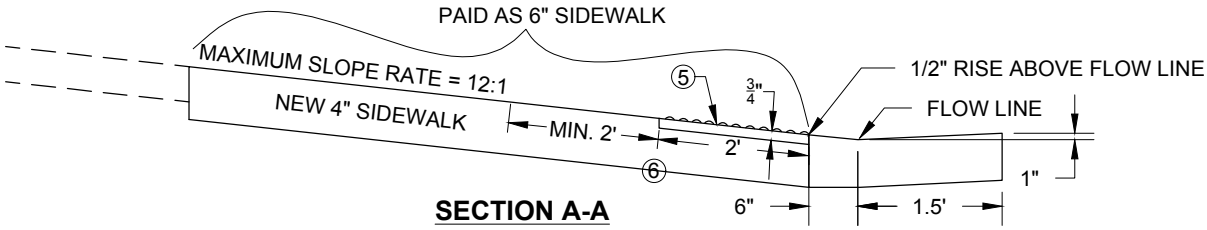

SECTION A-A

NOTE NO.① RAMPS TO BE BUILT WHERE CROSSWALKS EXIST SHALL BE DOWELED INTO EXISTING SIDEWALK.

NOTE NO.② SCORED JOINT OR DRILLED AND DOWELLED.

NOTE NO.③ RAMPS TO BE BUILT WHERE FULL CROSSWALKS EXIST SHALL BE REMOVED TO THE NEAREST EXPANSION OR CONTRACTION JOINT. THE ENGINEER WILL DETERMINE WHAT TYPE OF JOINT TO REPLACE.

NOTE NO.④ SIDE FLARE SLOPE MAY VARY DUE TO HEIGHT OF CURB.

NOTE NO.⑤ DETECTABLE WARNING PANEL PLACED 6" TO 8" FROM FACE OF CURB. PANEL SHALL NOT BE IN THE FLARE. PANEL SHALL BE 2' DEEP AND A MIN. OF 4' WIDE.

NOTE NO.⑥ TOTAL RAMP AREA SHALL BE 6" CONCRETE.

NOTE NO.⑦ MAX SLOPE RATE 12:1 (15' LONG MAXIMUM ALLOWED FOR STEEPER STREET/CURB GRADES AS APPROVED).

NOTE NO.⑧ PROVIDE MIN. 4'X4' LANDING AREA WITH MAX 2% SLOPE IN ANY DIRECTION.

Bismarck Engineering Department	TYPE 1 & 2 CURB RAMPS	SCALE: Not to Scale DATE: 3/2017	STANDARD DETAIL NO. 600-3

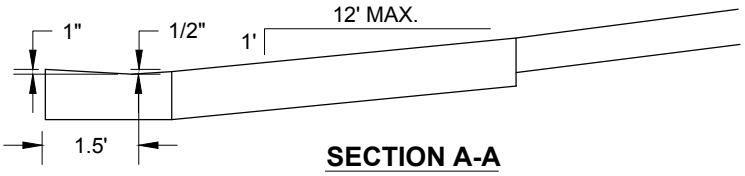

SECTION A-A

NOTE NO. 1
3/4" EXPANSION JOINT W/ 1/2" x12" SMOOTH REINFORCING STEEL OR #4 REINFORCING STEEL, WITH 8" PAPER TUBES OR BOND BREAKER MATERIAL WHEN USING 5/8" DRILL BIT, BREAKER MATERIAL MAY BE ELIMINATED.

NOTE NO. 2
RESIDENTIAL INTERSECTIONS SHALL USE 4.5' WALK AND RAMP SET 1.5' FROM PROPERTY LINE, UNLESS MOUNTABLE CURBS OR 6' SIDEWALK IS USED.

NOTE NO. 3
DETECTABLE WARNING PANEL. MIN. 2'x4'
PLACEMENT OF DETECTION PANELS SHALL BE DETERMINED BY ENGINEER ON ANY RADIUS 16' OR LARGER. PANELS MAY NOT BE PLACED IN THE FLARE OF RAMP.

NOTE NO. 4
INSTALL STEEL FENCE POSTS IN ACCORDANCE WITH SEC. 1205-3.9 WHEN DIRECTED.

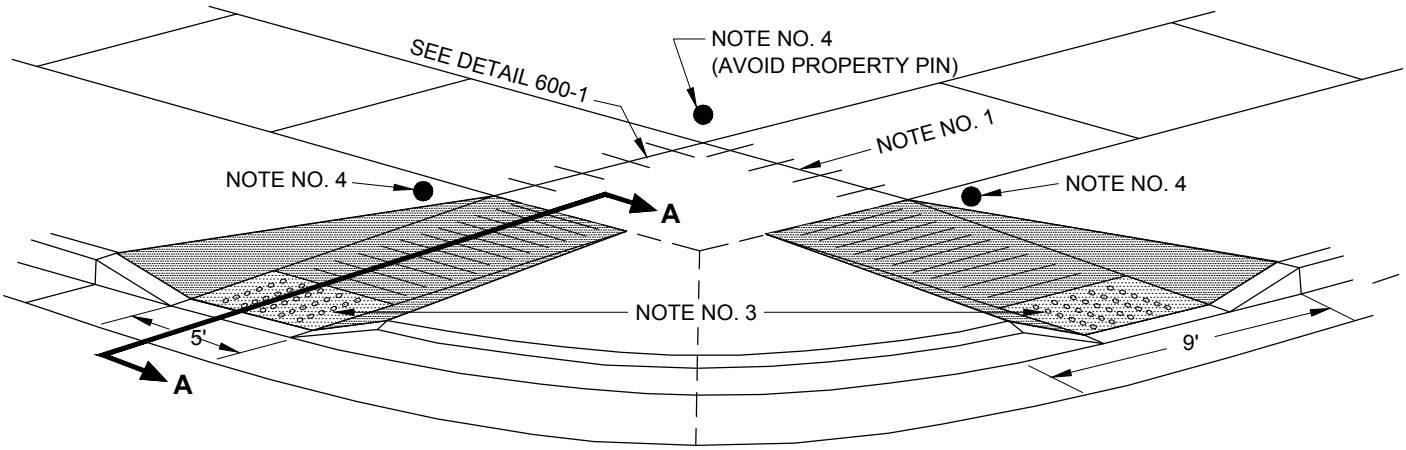

PERSPECTIVE VIEW OF COMMERCIAL & RESIDENTIAL RAMP

Bismarck Engineering Department	RESIDENTIAL CURB RAMPS	SCALE: Not to Scale DATE: 3/2017	STANDARD DETAIL NO. 600-4

1/4" BRASS BOLTS SHALL BE TAPPED INTO THE SUPPORT BRACES TO HOLD THE 1/4" STEEL SIDEWALK TRENCH LID DOWN. SUPPORT BRACES SHALL BE INSTALLED ONE AT EACH END AND 2' CENTER TO CENTER THEREAFTER.

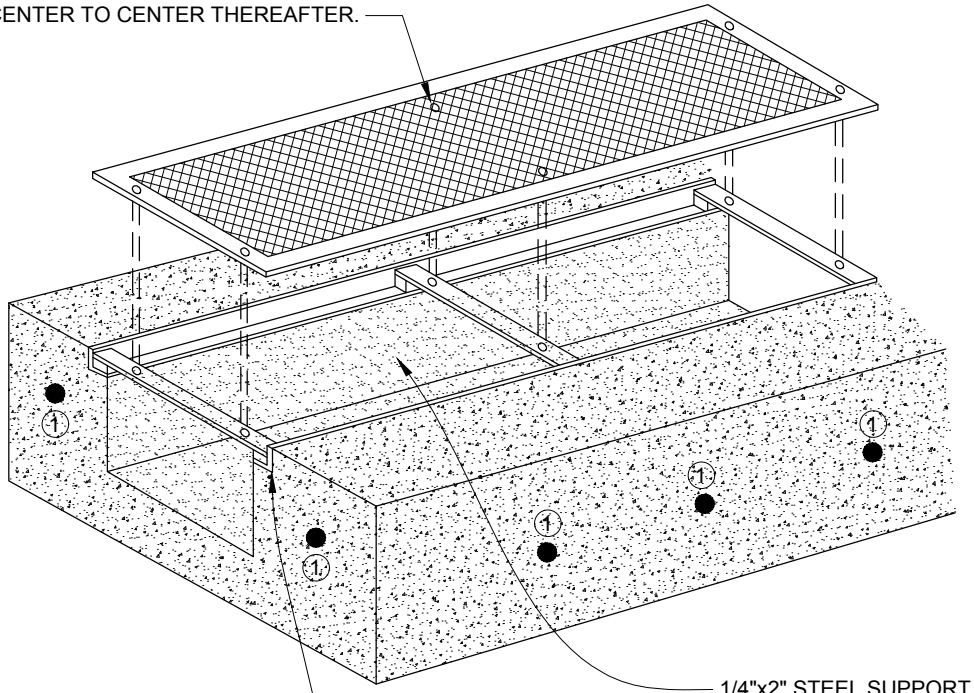

1/4"x2" STEEL SUPPORT BRACES WITH 1/2" STEEL SPACERS, ALL OF WHICH SHALL BE WELDED TO THE 1"x1" ANGLE IRON.

1"x1" ANGLE IRON WITH NO. 4 REBAR ANCHORS 3" LONG WELDED TO THE FRAME AT A 45° ANGLE DOWN. ANGLE IRON ANCHORS SHALL BE PLACED AT 18" CENTER TO CENTER.

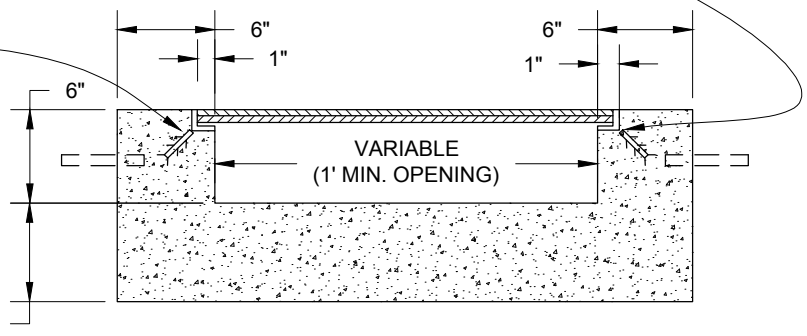

CONTRACTION JOINTS SHALL BE SCORED 1/3 THE DEPTH OF THE CONCRETE AT A MINIMUM SPACING OF 12'. ALL JOINTS IN THE GUTTER SHALL BE SEALED.

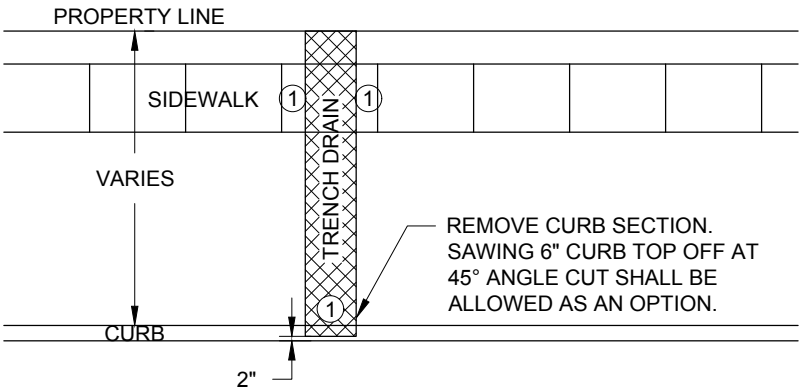

NOTE NO.1
INSTALL DRILLED IN DOWELS OR REINFORCING STEEL BARS AS DIRECTED BY ENGINEER.

TRENCH DRAINS SHALL BEGIN AT PROPERTY LINE OR PROPOSED BACK EDGE OF SIDEWALK AND SHALL EXTEND TO 2" FROM THE FACE OF THE CURB. ALL DRAINS MUST BE COMPLETELY COVERED INCLUDING THE BOULEVARD BETWEEN THE SIDEWALK AND THE CURB. GRADE FOR DEPTH SHALL BE DETERMINED BY THE ENGINEER.

Bismarck Engineering Department	SIDEWALK TRENCH DRAIN	SCALE: Not to Scale DATE: 3/2017	STANDARD DETAIL NO. 600-5

NOTE NO. 1 CENTER JOINT TO BE USED ON ALL DRIVEWAYS 18' IN WIDTH OR LESS. JOINT SHALL BE A CONTRACTION JOINT SCORED OR SAWED, 1/3 THE DEPTH OF THE CONCRETE. JOINT SHALL BE SEALED. DRIVEWAYS 19' TO 30' IN TOP WIDTH SHALL BE DIVIDED INTO 3 PARTS. DRIVEWAYS 31' AND LARGER SHALL BE DIVIDED INTO 4 PARTS.

NOTE NO. 2 CONTRACTION JOINT SCORED OR SAWED 1/3 THE DEPTH OF THE CONCRETE. JOINT SHALL BE SEALED.

FLARE DROP TO ¾" LIP OF DRIVEWAY SHALL DROP @ ½ OF FLARE DISTANCE. SEE PLAN VIEW.

NOTE NO. 3 FLARE WIDTHS (X) SHALL BE DETERMINED BY DRIVEWAY DEPTH (Y) AS FOLLOWS:

Y=4.0' : X=2.0'	Y=9.5' : X=5.0' - 6.0'
Y=6.5' : X=3.0'	(AS DETERMINED
Y=8.0' : X=4.0'	BY ENGINEER)

NOTE NO. 4 OPTIONAL JOINT WHEN POURED CONTINUOUS.

NOTE NO. 5 WHEN THE LENGTH IS 9.5' OR OVER, A HORIZONTAL CONTRACTION JOINT SHALL BE SCORED OR SAWED. JOINT SHALL BE SEALED.

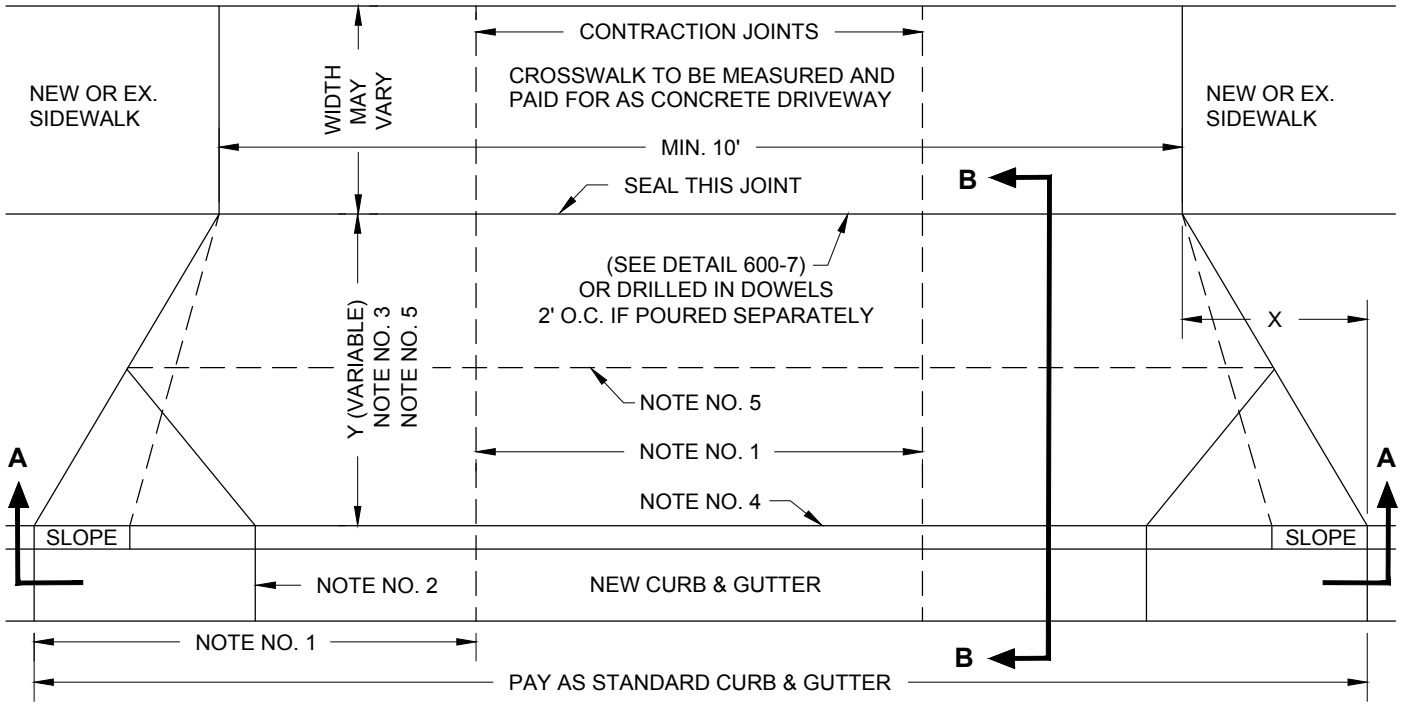

PLAN VIEW

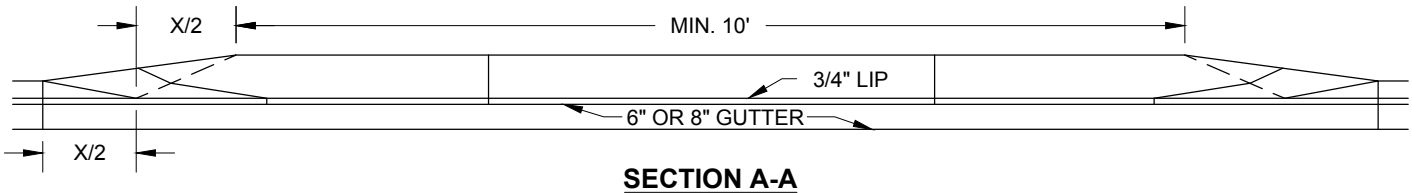

SECTION A-A

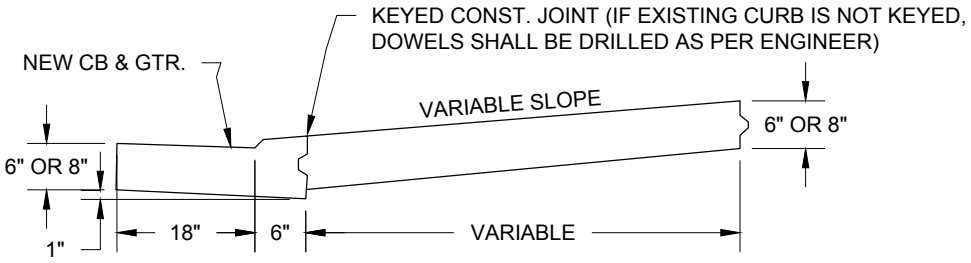

SECTION B-B

Bismarck Engineering Department	**DROP CURB DRIVEWAY RESIDENTIAL & COMMERCIAL**	SCALE: Not to Scale DATE: 3/2017	STANDARD DETAIL NO. **600-6**

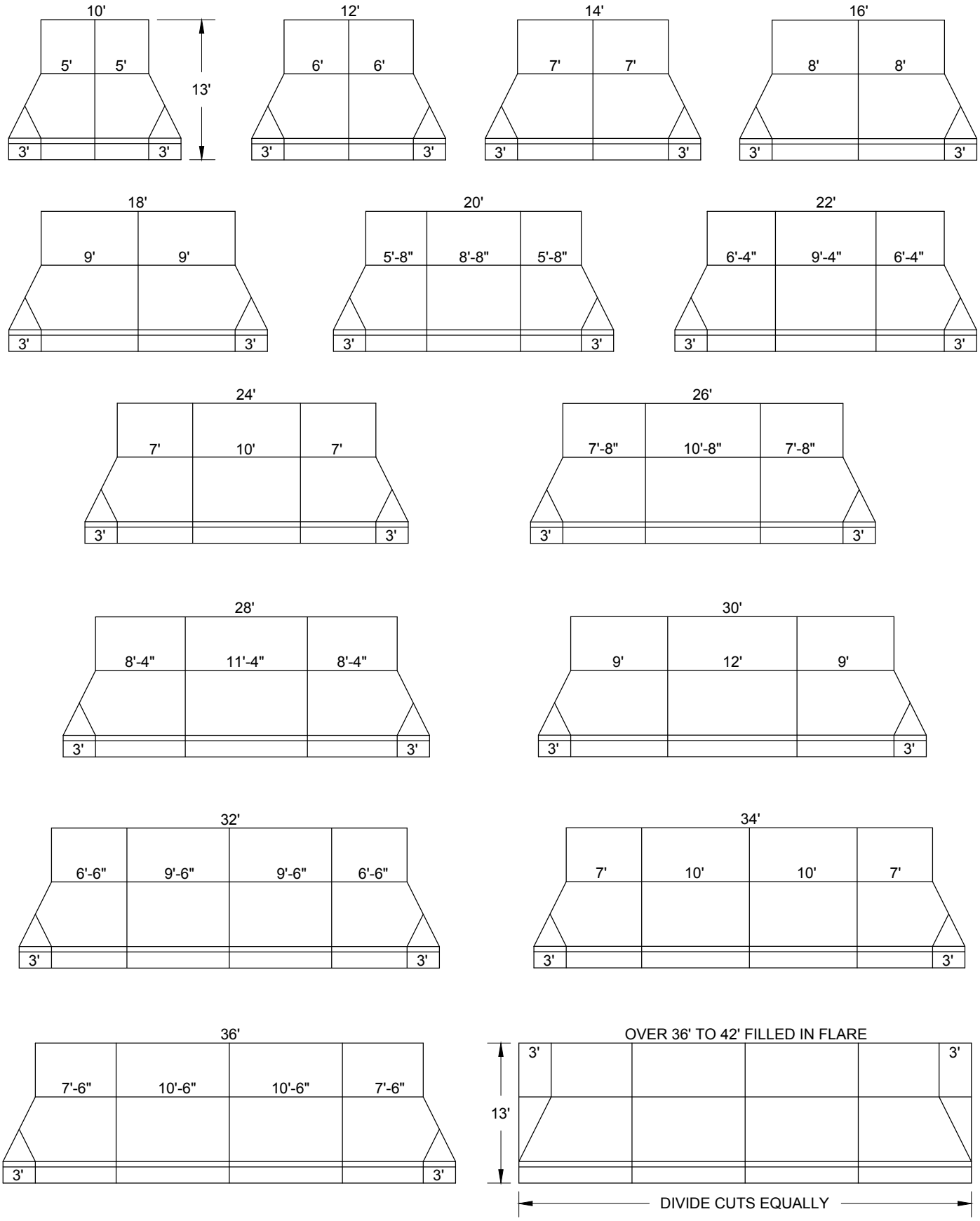

Bismarck Engineering Department	**DIVIDING DRIVEWAYS (SHEET 1 OF 2)**	SCALE: Not to Scale DATE: 3/2017	STANDARD DETAIL NO. **600-7**

38' (COMMERCIAL ONLY)

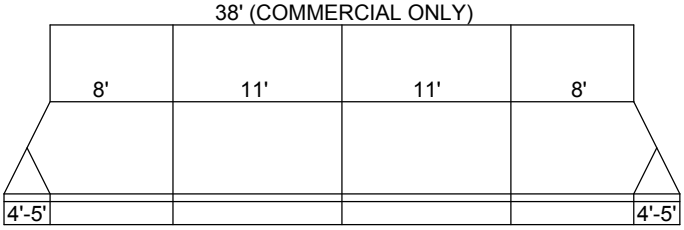

40' (COMMERCIAL ONLY)

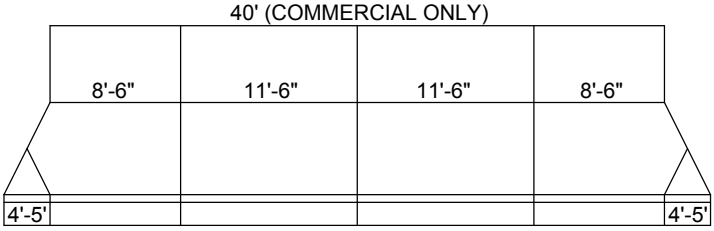

OVER 32' TO 42'

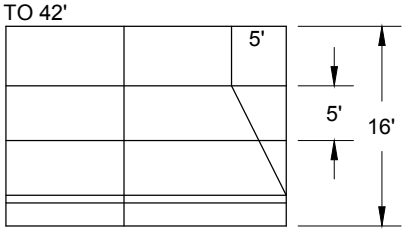

Bismarck Engineering Department	**DIVIDING DRIVEWAYS (SHEET 2 OF 2)**	SCALE: Not to Scale DATE: 3/2017	STANDARD DETAIL NO. **600-8**

NOTE NO. 1 (2) 1/2"x12" SMOOTH REINFORCING STEEL, OR (3) NO. 4 REINFORCING STEEL SHALL BE DRILLED IN WITH A 5/8" BIT ON EITHER END OF THE DRIVEWAY AS DIRECTED BY THE ENGINEER.

NOTE NO. 2 CENTER JOINT TO BE USED ON ALL DRIVEWAYS 23' IN WIDTH OR LESS. JOINT SHALL BE A CONTRACTION JOINT SCORED OR SAWED 1/3 THE DEPTH OF THE CONCRETE. JOINT SHALL BE SEALED. DRIVEWAYS 24' TO 33' IN TOP WIDTH SHALL BE DIVIDED INTO 3 PARTS, DRIVEWAYS 34' AND LARGER SHALL BE DIVIDED INTO 4 PARTS. WHEN THE DISTANCE IS 9.5' OR OVER, A HORIZONTAL CONTRACTION JOINT SHALL BE SCORED OR SAWED. JOINT SHALL BE SEALED.

NOTE NO. 3 WHEN THE DISTANCE IS 4' OR OVER USE CONTRACTION JOINT DESCRIBED IN NOTE NO. 2.

NOTE NO. 4 JOINT SHALL BE A CONTRACTION JOINT WITH CURB CUT FULL DEPTH AND THE REMAINER OF THE JOINT CUT 1/3 THE DEPTH OF THE CONCRETE. JOINT SHALL BE SEALED.

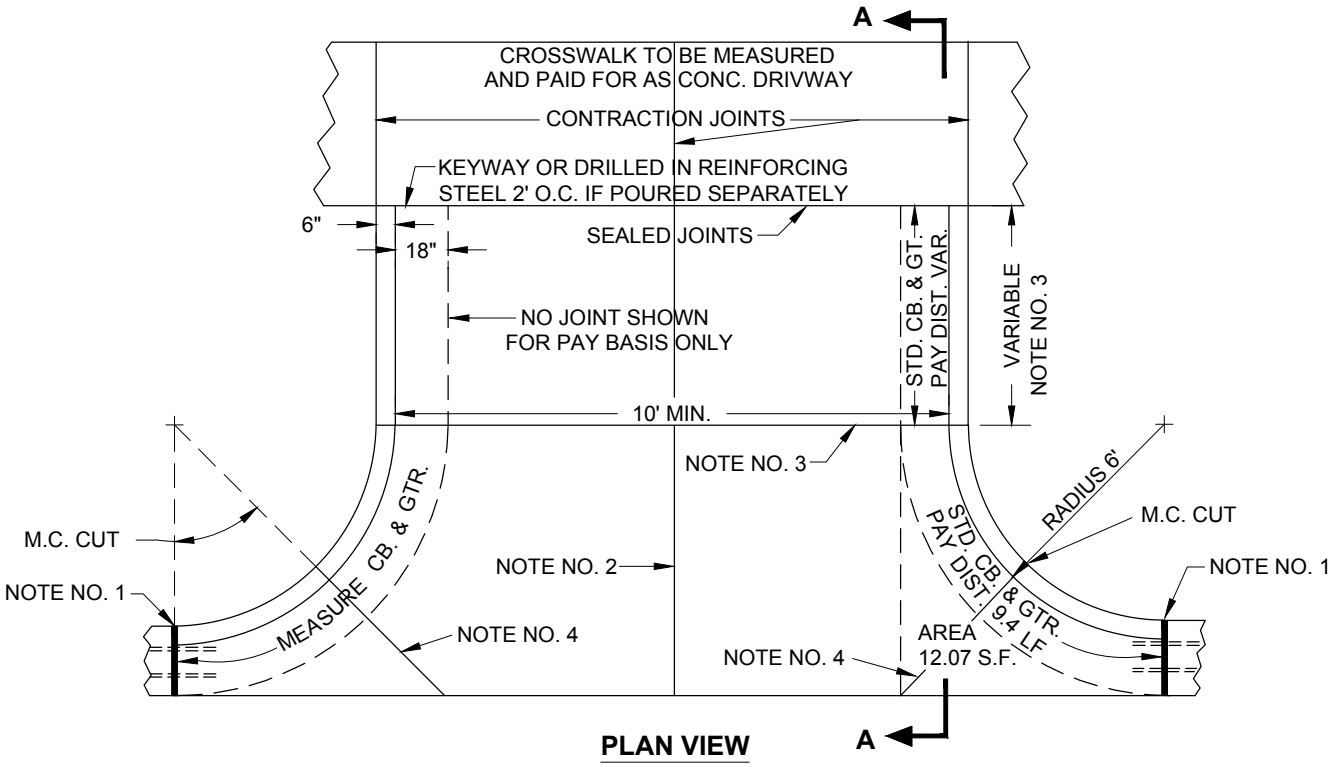

PLAN VIEW

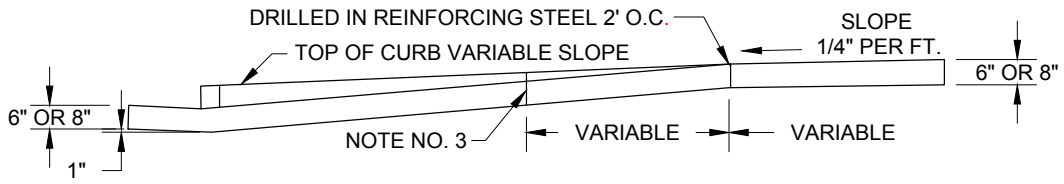

SECTION A-A

Bismarck Engineering Department	**RADIUS DRIVEWAY WITH 6" OR 8" CONCRETE**	SCALE: Not to Scale DATE: 3/2017	STANDARD DETAIL NO. **600-9**

NOTE NO. 1 FOR 6" OR 8" CONCRETE THIS SHALL BE A SCORED OR SAWED JOINT, A MINIMUM OF 1/3 THE DEPTH OF THE CONCRETE.

NOTE NO. 2 CENTER JOINT TO BE USED ON ALL DRIVEWAYS 23' IN WIDTH OR LESS. JOINT SHALL BE A SAWED CONSTRUCTION JOINT OR CONTRACTION JOINT SCORED, 1/3 THE DEPTH OF THE CONCRETE. JOINT SHALL BE SEALED. DRIVEWAYS 24' TO 33' IN TOP WIDTH SHALL BE DIVIDED INTO 3 PARTS. DRIVEWAYS 34' AND LARGER SHALL BE DIVIDED INTO 4 PARTS. HORIZONTAL CUTS SHALL FOLLOW JOINTS SAWED OR CONTRACTION JOINT OF 4" CONCRETE.

NOTE NO. 3 THIS SHALL BE A CONTRACTION JOINT. CONTRACTION JOINT SHALL BE SCORED 1/3 THE DEPTH OF THE CONCRETE. ALL JOINTS SHALL BE SEALED. IF THIS IS A CUT-IN DRIVEWAY, (2) 1/2"x12" SMOOTH REINFORCING STEEL OR (3) NO. 4 REINFORCING BARS SHALL BE DRILLED IN WITH A 5/8" BIT ON BOTH ENDS OF THE DRIVEWAY OR AS DIRECTED BY THE ENGINEER.

NOTE NO. 4 WHEN COMMERCIAL OR RESIDENTIAL DRIVEWAY DOES NOT HAVE A 4' LANDING, DRIVEWAY RUNNING SLOPE SHALL BE A MAXIMUM OF OF 12:1.

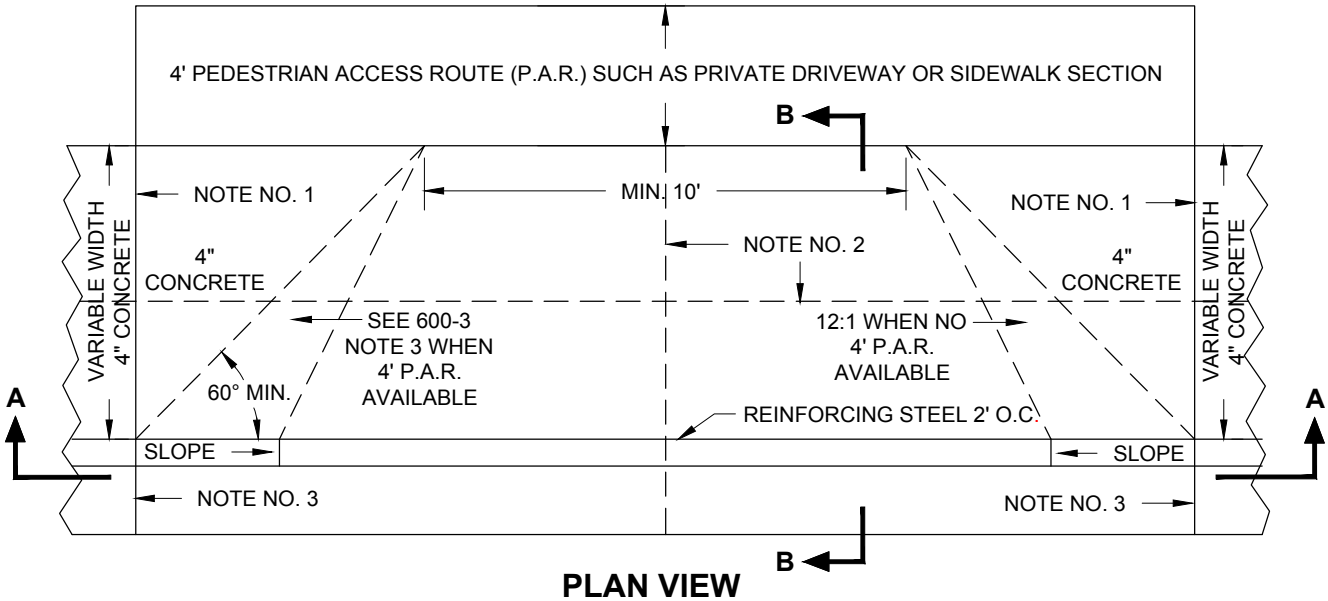

PLAN VIEW

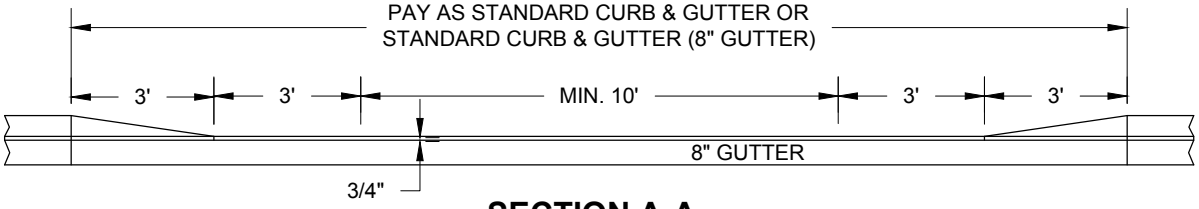

SECTION A-A

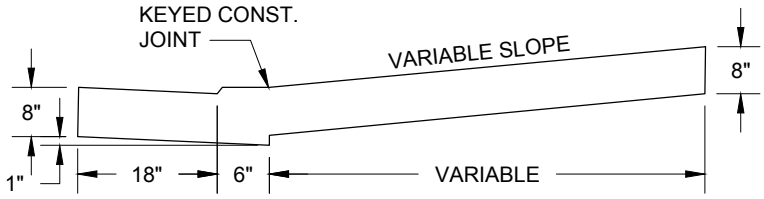

SECTION B-B

Bismarck Engineering Department	**COMMERCIAL DRIVEWAY WITH 6" OR 8" CONCRETE**	SCALE: Not to Scale DATE: 3/2017	STANDARD DETAIL NO. **600-10**

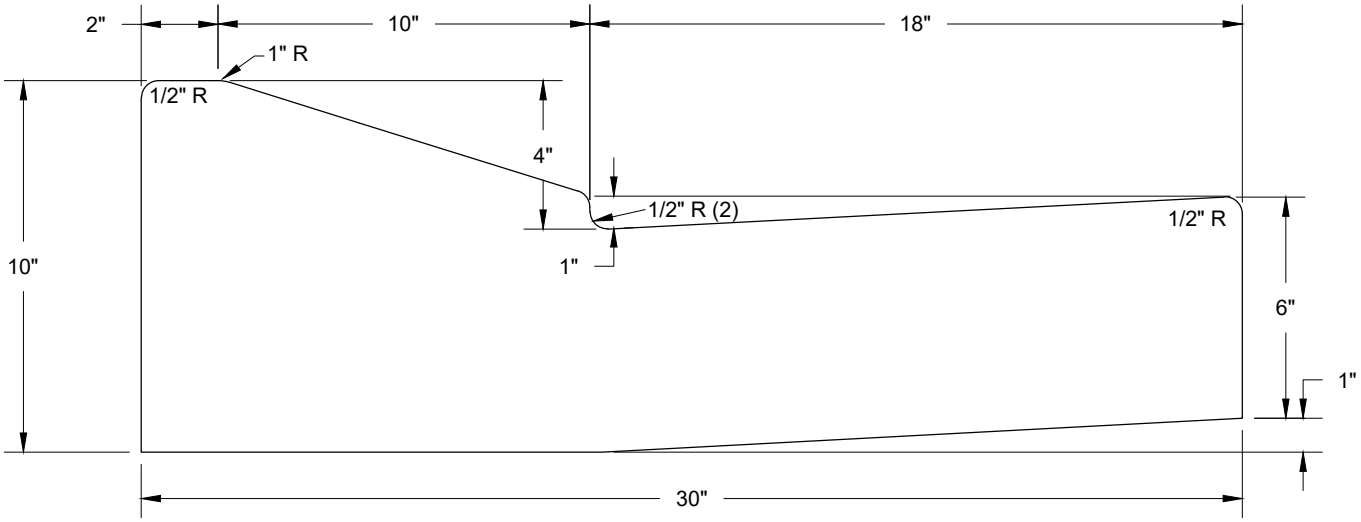

Bismarck Engineering Department	**MOUNTABLE CURB & GUTTER**	SCALE: Not to Scale DATE: 3/2019	STANDARD DETAIL NO. **600-11**

NOTE NO. 1 3/4" EXPANSION WITH 3/4"x24" SMOOTH REINFORCING STEEL & 16" PAPER TUBES OR BOND BREAKER MATERIAL. DOWELS SHALL BE GREASED THE FULL LENGTH. ALL PAPER TUBES SHALL BE PLUGGED OR CRIMPED ON OPEN END. JOINTS SHALL BE PLACED EVERY 100' OR AS DETERMINED BY THE ENGINEER. JOINTS SHALL BE ½" LOWER THAN THE TOP OF CURB. THIS JOINT MUST BE SEALED.

NOTE NO. 2 CONTRACTION JOINT SCORED 1/3 THE DEPTH OF THE CONCRETE.

NOTE NO. 3 THIS KEYED CONSTRUCTION JOINT WHEN SPECIFIED, SHALL BE PAID FOR AS "EXTRA WORK" IN ACCORDANCE WITH SECTION 104 UNLESS SPECIFICALLY CALLED FOR IN THE SPECIAL PROVISIONS OR SHOWN ON THE PLANS.

NOTE NO. 4 CURB & GUTTER SHALL BE 6" AND UNREINFORCED UNLESS OTHERWISE SPECIFIED.

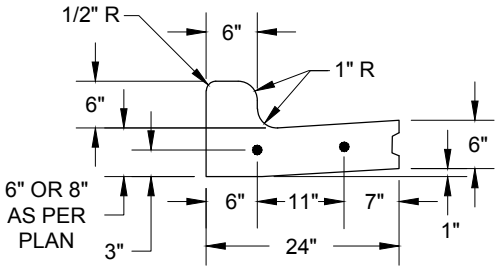

6" OR 8" CURB & GUTTER
SECTION A-A

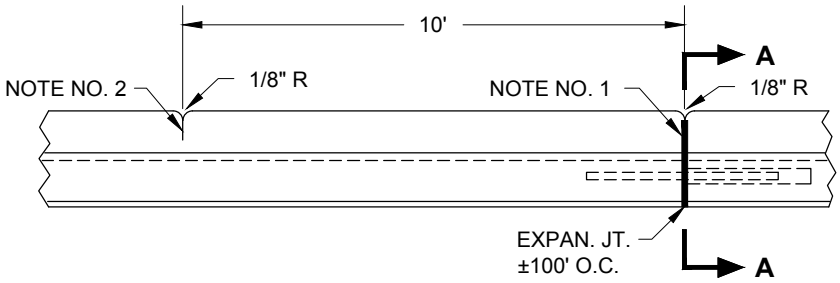

6" OR 8" CURB & GUTTER
FRONT VIEW

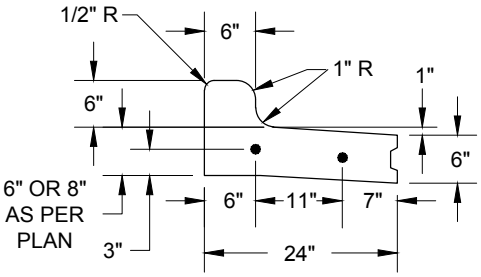

OUTFLOW CURB & GUTTER
SECTION A-A

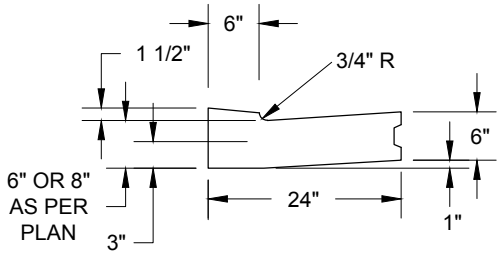

DEPRESSED CURB & GUTTER

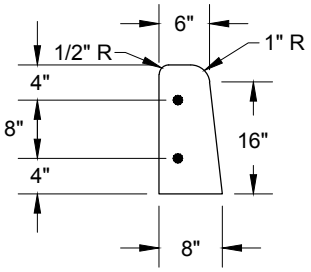

SECTION C-C

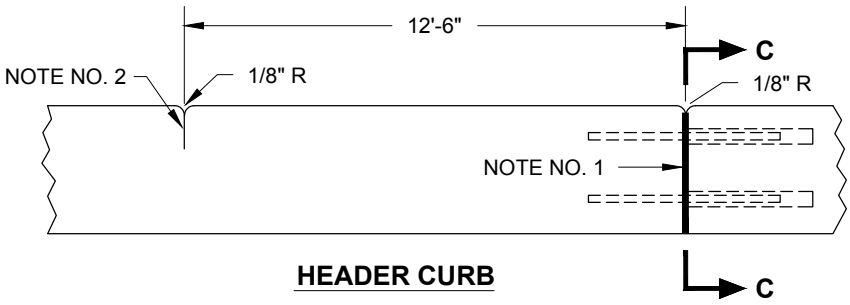

HEADER CURB
FRONT VIEW

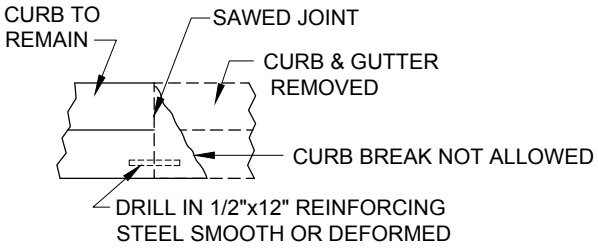

CURB REPAIR

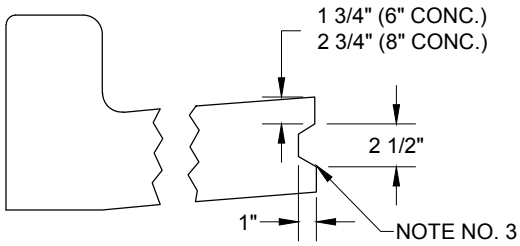

KEYED CONSTRUCTION JOINT DETAIL

Bismarck Engineering Department	STANDARD CURB, CURB & GUTTER	SCALE: Not to Scale DATE: 3/2017	STANDARD DETAIL NO. 600-12

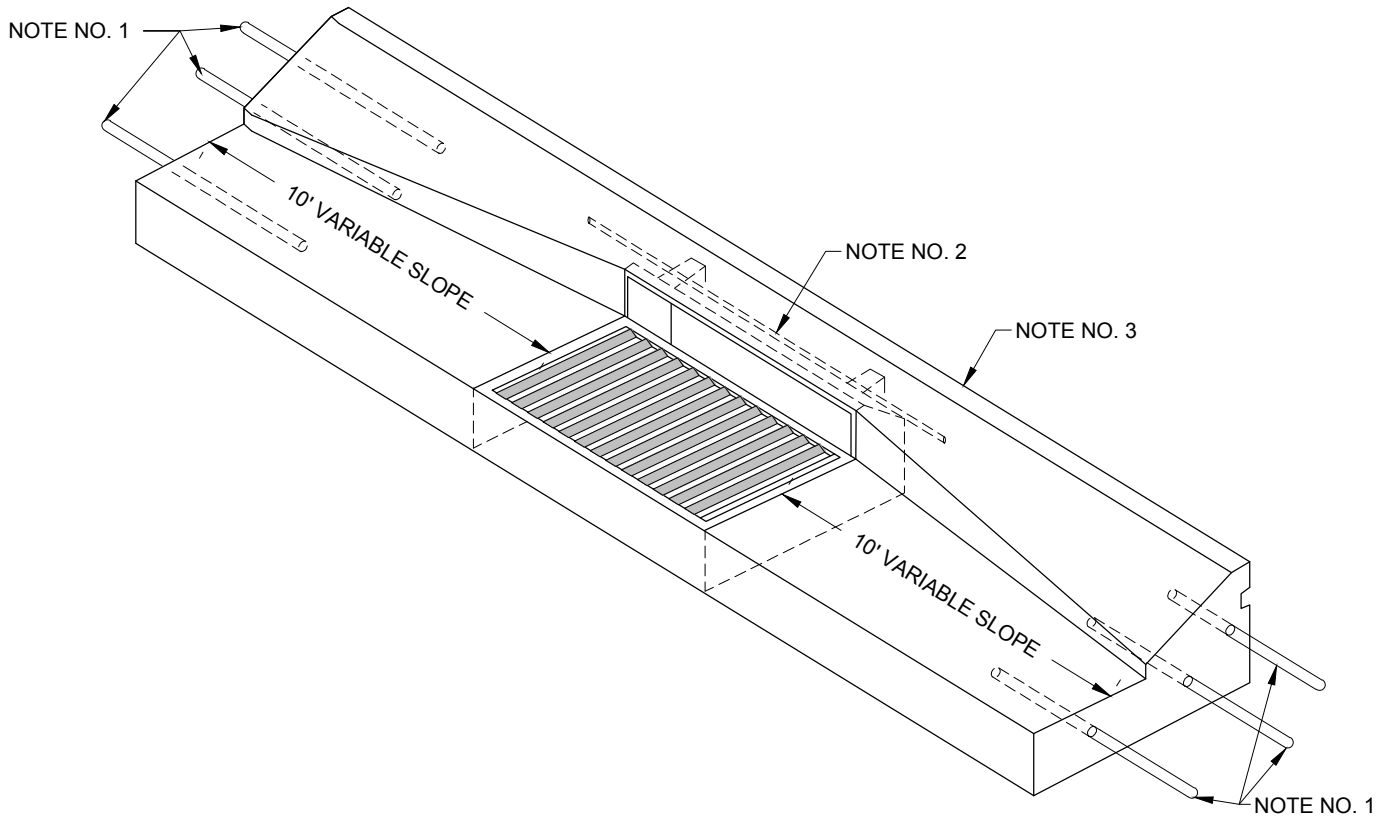

NOTE NO. 1 DRILLED IN SMOOTH REINFORCING STEEL OR NO. 4 REBAR DRILLED WITH 5/8" BIT.

NOTE NO. 2 NO. 4 REBAR INSTALLED ON BACK OF INLET SHALL EXTEND 6" INTO THE CURB ON BOTH SIDES.

NOTE NO. 3 BACK OF CURB MUST ENCASE BARREL OF MANHOLE.

Bismarck Engineering Department	**MOUNTABLE CURB & GUTTER W/ INLET**	SCALE: Not to Scale DATE: 3/2017	STANDARD DETAIL NO. **600-14**

NOTE NO. 1 3/4" EXPANSION JOINT WITH 3/4"X24" SMOOTH DOWELS & 16" PAPER TUBES. DOWELS SHALL BE GREASED THE FULL LENGTH. ALL PAPER TUBES SHALL BE PLUGGED OR CRIMPED ON OPEN END. ALL JOINTS SHALL BE SEALED. DOWELS SHALL BE SUPPORTED BY AN APPROVED SUPPORT MADE OF NO. 7 AWG WIRE.

NOTE NO. 2 CONTRACTION JOINT SCORED 1/3 THE DEPTH OF THE CONCRETE. JOINT SHALL BE SEALED.

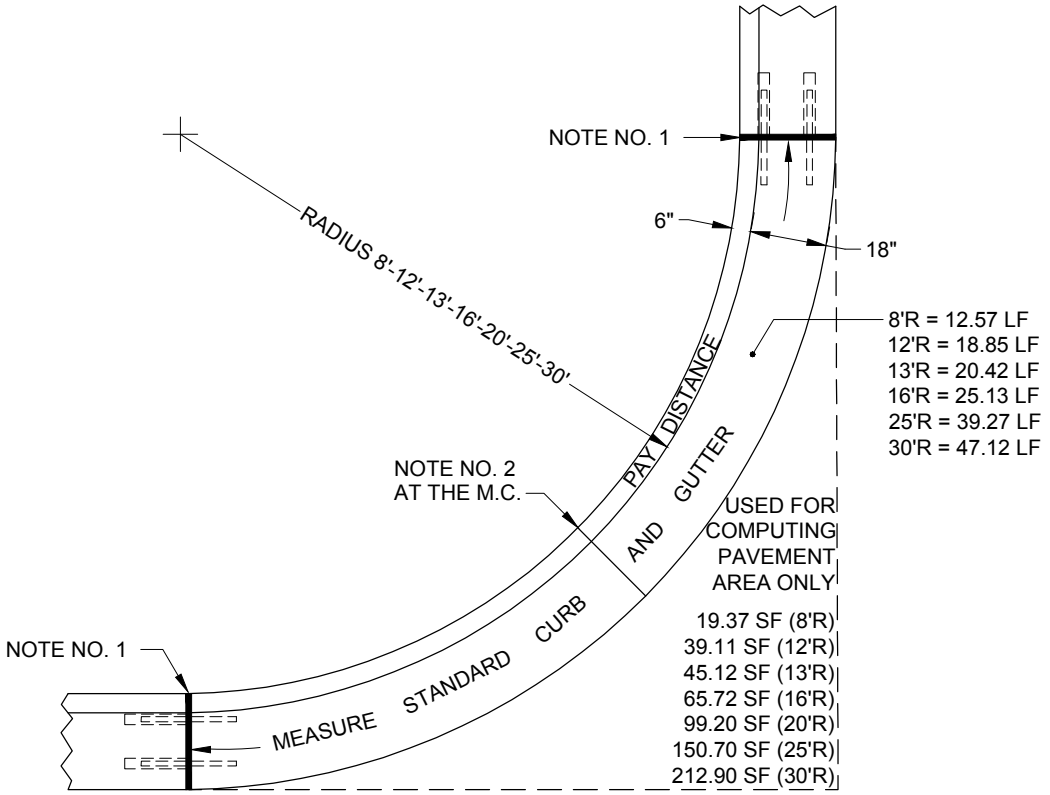

RADIUS	USE
8'	SPECIAL DESIGNED LOCATION
12'	SPECIAL DESIGNED LOCATION
13'	40' STREET INTERSECTS 40' OR 44' STREET
16'	40' OR 44' STREET INTERSECTS 48' STREET
20'	SPECIAL DESIGNED LOCATION
25'	48' STREET INTERSECTS 48' STREET
30'	SPECIAL DESIGNED LOCATION

Bismarck Engineering Department

INTERSECTION CURVE

SCALE: Not to Scale

DATE: 3/2017

STANDARD DETAIL NO. **600-15**

NOTE NO. 1 FOR NEW CONSTRUCTION WHEN SPANDREL IS POURED SEPARATELY OR FOR VALLEY GUTTER REPAIRS, 18" NO. 5 DEFORMED BARS SHALL BE DRILLED IN 1' ON CENTER.

NOTE NO. 2 CONTRACTION JOINT SCORED ⅓ THE DEPTH OF THE CONCRETE. ALL JOINTS SHALLBE SEALED.

NOTE NO. 3 DRILL IN ½" X12" SMOOTH REINFORCING STEEL OR #4 REINFORCING STEEL. WHEN USING ⅝" DRILL BIT, BOND BREAKER MATERIAL MAY BE ELIMINATED.

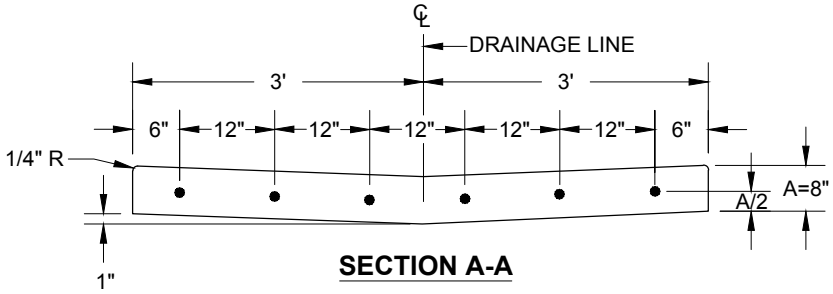

SECTION A-A

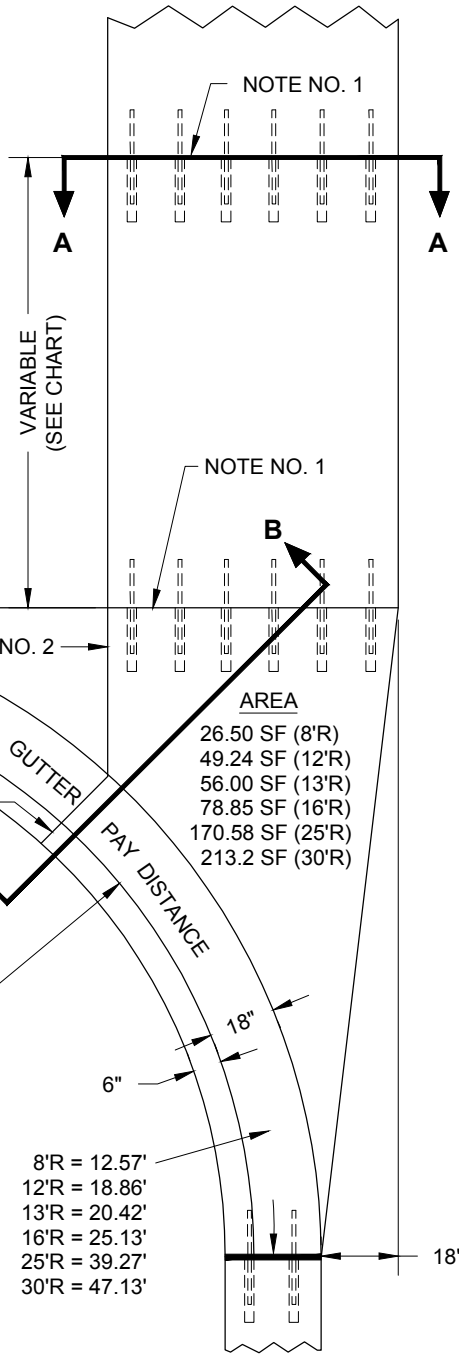

STR. WIDTH	PVMT. WIDTH	JT. SPACING
37'	34'	8.5'
40'	37'	9.25'
44'	41'	8.2'
48'	45'	9.0'
52'	49'	9.8'

AREA

26.50 SF (8'R)
49.24 SF (12'R)
56.00 SF (13'R)
78.85 SF (16'R)
170.58 SF (25'R)
213.2 SF (30'R)

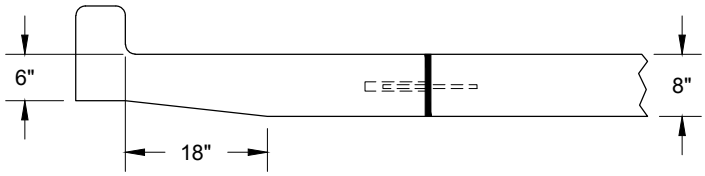

SECTION B-B

TRANSITION TO AN 8" VALLEY GUTTER

PLAN VIEW

Bismarck Engineering Department	VALLEY GUTTER	SCALE: Not to Scale	STANDARD DETAIL NO.
		DATE: 3/2017	600-16

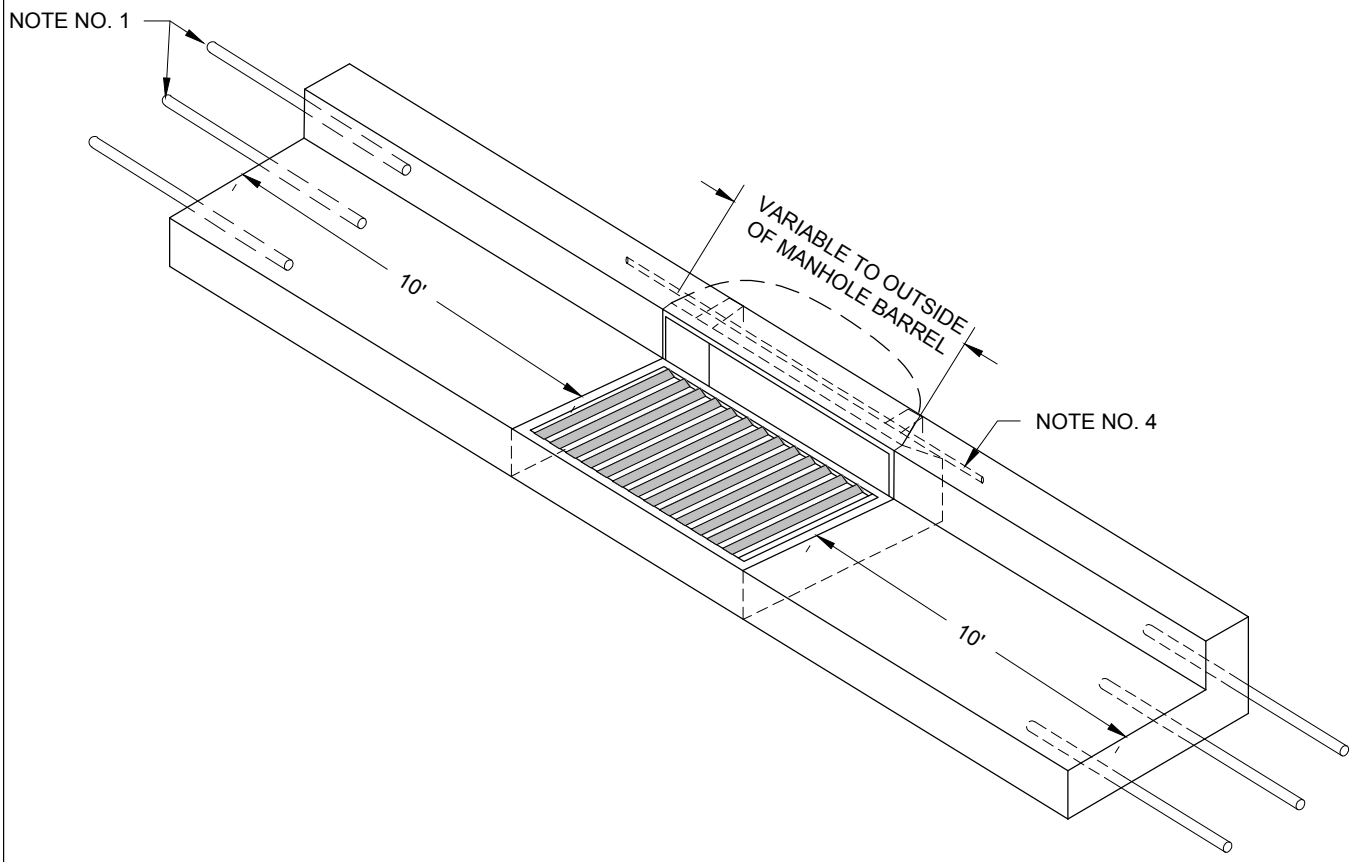

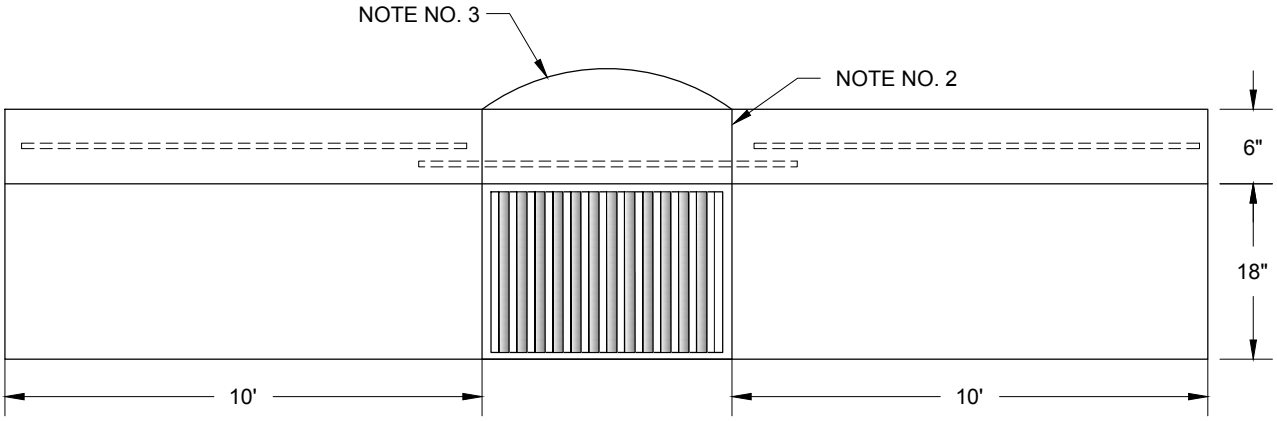

NOTE NO. 1 DRILLED IN SMOOTH REINFORCING STEEL OR NO. 4 REBAR DRILLED WITH 5/8" BIT. SMOOTH REINFORCING STEEL SHALL BE GREASED THE FULL LENGTH. ALL PAPER TUBES SHALL BE PLUGGED OR CRIMPED ON OPEN END AS DETERMINED BY THE ENGINEER. ALL JOINTS SHALL BE SEALED.

NOTE NO. 2 CONTRACTION JOINT SCORED TO 1/3 DEPTH OF THE CONCRETE.

NOTE NO. 3 WIDENING CURB BEHIND INLET SHALL BE INCIDENTAL.

NOTE NO. 4 NO. 4 REBAR INSTALLED ON BACK OF INLET SHALL EXTEND 6" INTO THE CURB ON BOTH SIDES.

Bismarck Engineering Department	**STANDARD CURB & GUTTER W/ INLET**	SCALE: Not to Scale DATE: 3/2017	STANDARD DETAIL NO. **600-17**

NOTES:

1. BOULEVARD WIDTH VARIES BASED ON WIDTH OF STREET & WIDTH OF RIGHT-OF-WAY.
2. SIDEWALK ADJACENT TO CURB SHALL BE A MINIMUM OF 5' TO COMPLY WITH ADA STANDARDS.
3. WHEN A 4.5' SIDEWALK INSTALLATION OF 200' OR MORE IS INSTALLED, A PASSING SPACE OF 5' X 5' MUST BE INSTALLED.

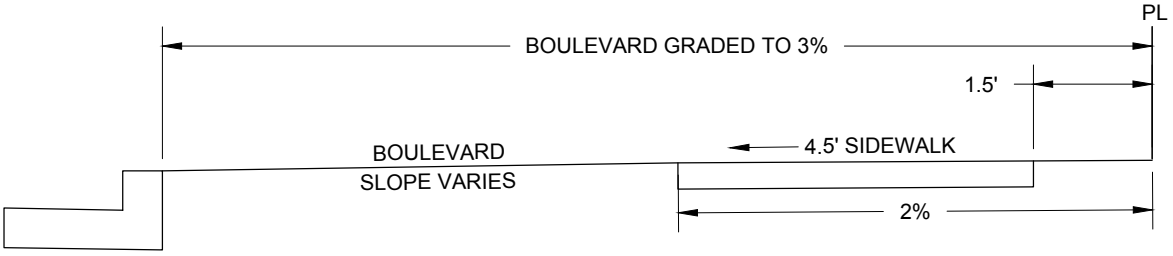

RESIDENTIAL SIDEWALK & RIGHT-OF-WAY GRADING

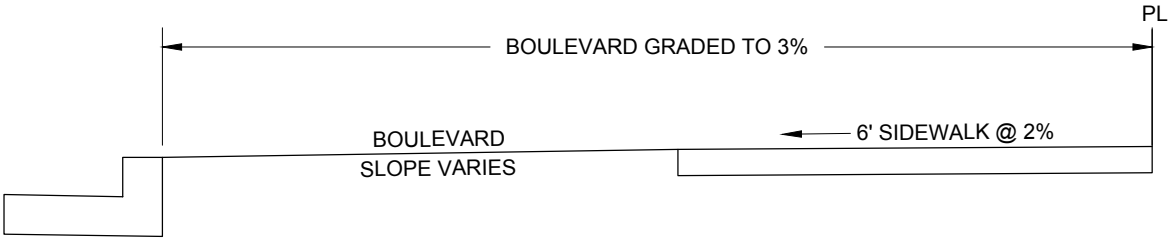

COMMERCIAL/MULTI-FAMILY SIDEWALK & RIGHT-OF-WAY GRADING

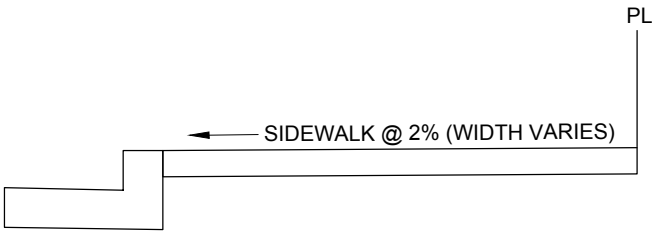

SIDEWALK ADJACENT TO CURB

Bismarck Engineering Department	SIDEWALK & RIGHT-OF-WAY GRADING DETAIL	SCALE: Not to Scale DATE: 3/2017	STANDARD DETAIL NO. 600-18

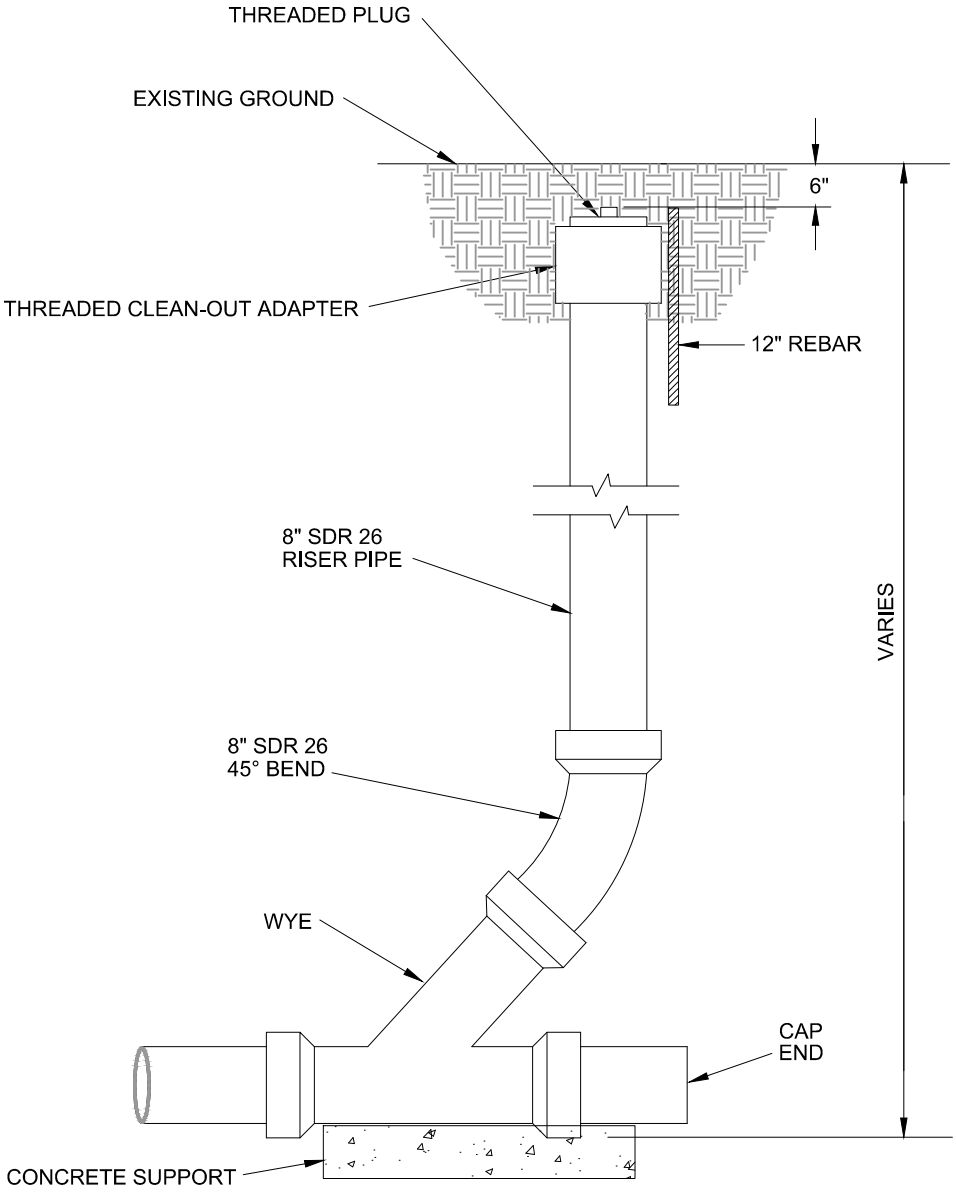

Bismarck Engineering Department	**CLEAN-OUT DETAIL**	SCALE: Not to Scale DATE: 3/2017	STANDARD DETAIL NO. **801-1**

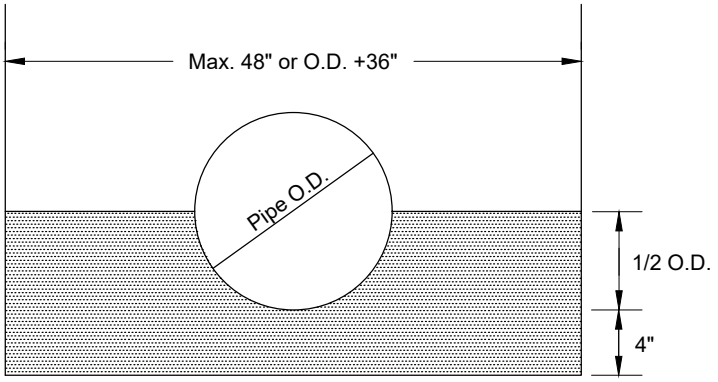

PIPE BEDDING QUANTITIES - SANITARY SEWER

4" to 27" Based on SDR35 PVC
30" to 48" Based on ASTM F-794 PVC

PIPE SIZE	TRENCH WIDTH	C.Y. / FT.	TONS / FT.
4"	48"	0.0736	0.1251
6"	48"	0.0842	0.1431
8"	48"	0.0941	0.1600
10"	48"	0.1031	0.1753
12"	49"	0.1134	0.1928
15"	51"	0.1322	0.2247
18"	55"	0.1535	0.2610
21"	58"	0.1750	0.2975
24"	61"	0.1952	0.3318
27"	64"	0.2170	0.3689
30"	68"	0.2450	0.4165
36"	74"	0.2915	0.4956
42"	80"	0.3397	0.5775
48"	87"	0.3971	0.6751

5 Tons / Manhole

Bismarck Engineering Department	SANITARY SEWER PIPE BEDDING	SCALE: Not to Scale DATE: 3/2019	STANDARD DETAIL NO. 801-2

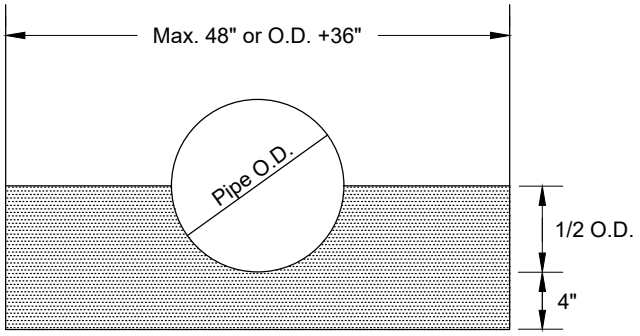

RCP PIPE

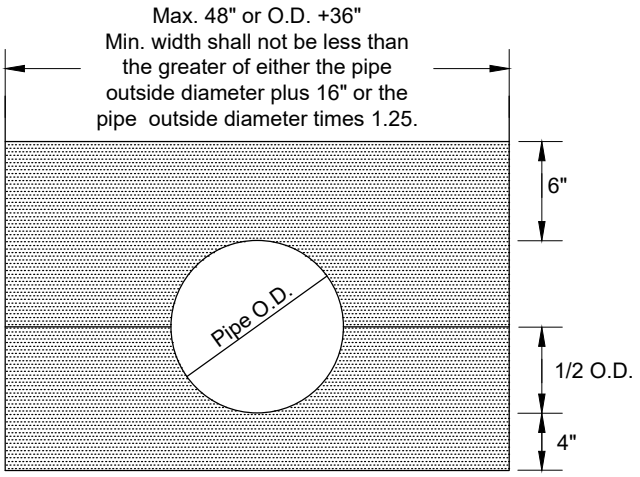

HDPE PIPE

PIPE BEDDING QUANTITIES - STORM SEWER

12" to 15" Based on SDR35 PVC
18" to 30" Based on Ribbed PVC
33" to 84" Based on RC Pipe

PIPE SIZE	TRENCH WIDTH	C.Y. / FT.	TONS / FT.
12"	49"	0.1134	0.1928
15"	52"	0.1322	0.2247
18"	56"	0.1595	0.2712
21"	59"	0.1818	0.3091
24"	62"	0.2022	0.3437
27"	65"	0.2247	0.3820
30"	69"	0.2524	0.4291
33"	77"	0.3146	0.5348
36"	80"	0.3394	0.5770
42"	87"	0.3974	0.6756
48"	94"	0.4581	0.7788
54"	101"	0.5214	0.8864
60"	108"	0.5875	0.9988
66"	115"	0.6563	1.1157
72"	122"	0.7278	1.2373
78"	129"	0.8020	1.3634
84"	136"	0.8789	1.4941

5 Tons / Manhole
2.5 Tons / Inlet
2.5 Tons / F.E.S.

Bismarck Engineering Department	STORM SEWER PIPE BEDDING	SCALE: Not to Scale DATE: 3/2019	STANDARD DETAIL NO. 802-1

NOTES:

1. CONNECTION AND PIPE TO BE BACKFILLED PER CLASS SPECIFIED.
2. IN LIEU OF AN INTERNAL CYLINDER, AN HDPE WATERTIGHT REPAIR COUPLER CAN BE USED.
3. INTERNAL CYLINDER ADAPTER IS NOT RECOMMENDED FOR DOWNSTREAM CONNECTIONS.

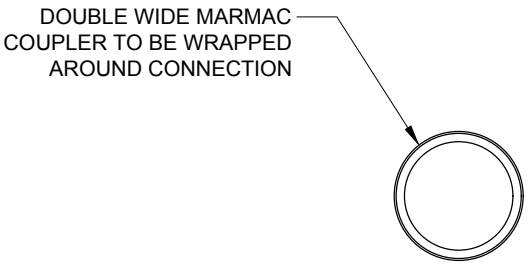

SECTION A-A

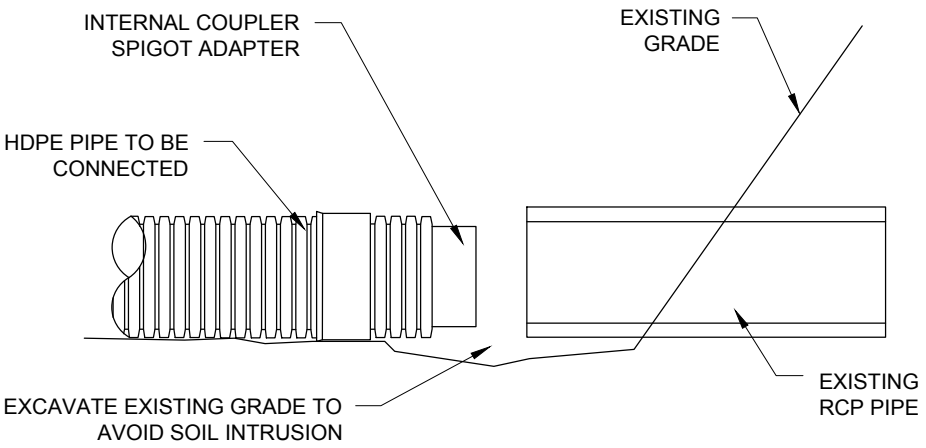

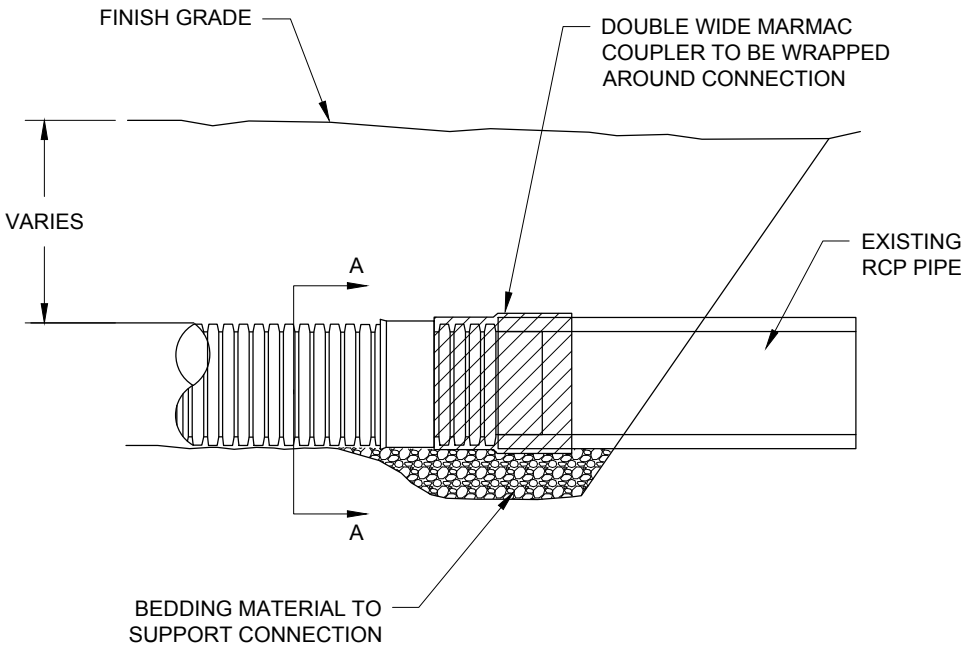

Bismarck Engineering Department	HDPE TO REINFORCED CONCRETE PIPE CONNECTION DETAIL	SCALE: Not to Scale DATE: 3/2017	STANDARD DETAIL NO. 802-2

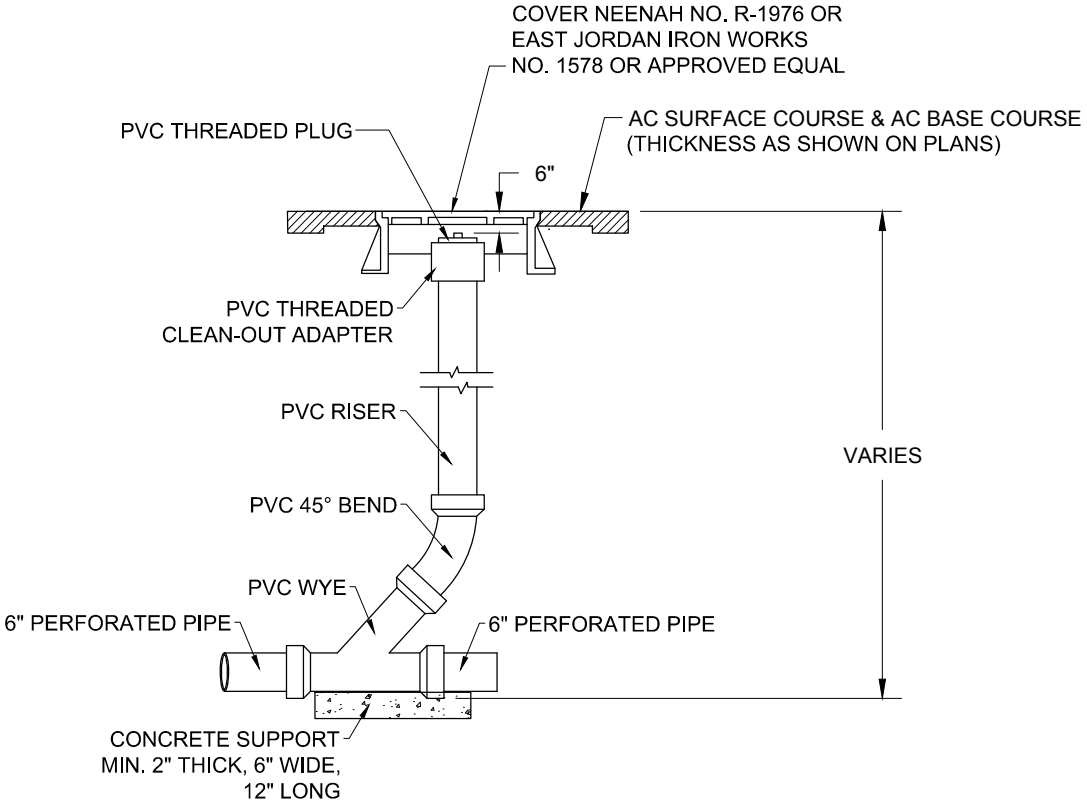

SECTION VIEW

Bismarck Engineering Department	**PERFORATED PIPE IN-LINE CLEANOUT**	SCALE: Not to Scale DATE: 3/2017	STANDARD DETAIL NO. **802-3**

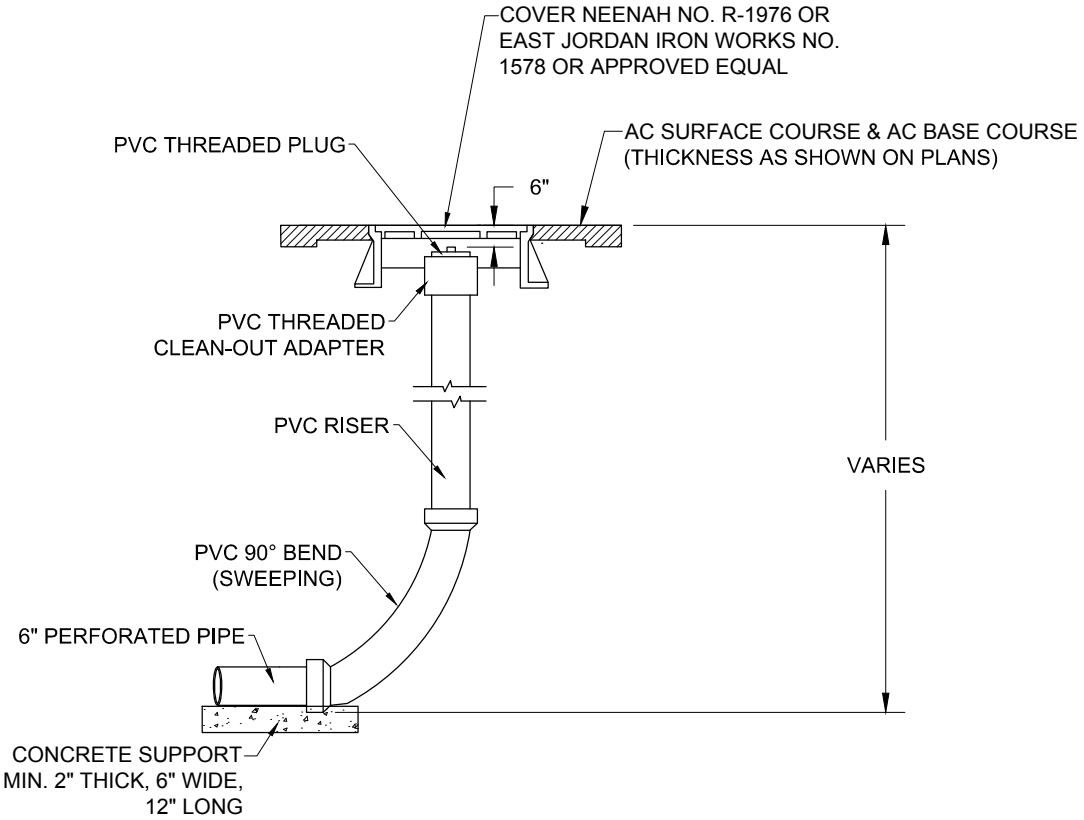

SECTION VIEW

Bismarck Engineering Department	**PERFORATED PIPE END OF RUN CLEANOUT**	SCALE: Not to Scale DATE: 3/2017	STANDARD DETAIL NO. **802-4**

NOTE NO. 1 BLOCKING OF TYPICAL HORIZONTAL BEND WILL INCLUDE ALL BENDS 11 1/4° (1/32) TO 90° (1/4)

NOTE NO. 2 BLOCK TEE AS SHOWN. IN THE EVENT THAT ONE SIDE OF THE MAIN IS PLUGGED, 2 THRUST BLOCKS WILL BE REQUIRED.

NOTE NO. 3 BLOCKING OF PLUG IS TO INCLUDE PLYBOARD BETWEEN THE PLUG AND CONCRETE.

NOTE NO. 4 BLOCKING OF CROSS WITH 2 PLUGS IS AS SHOWN. WITH ONLY 1 PLUG PROCEED SAME AS TEE.

NOTE NO. 5 JOINTS SHALL BE RESTRAINED IF SIZE IS REDUCED 2 PIPE SIZES OR MORE.

NOTE NO. 6 ALL VERTICAL BENDS SHALL BE RESTRAINED.

NOTE NO. 7 ALL HYDRANTS TO BE BLOCKED AS SHOWN. KEEP CONCRETE AWAY FROM WEEP HOLES.

NOTE NO. 8 THE END AREA OF CONCRETE THRUST BLOCKS SHALL BE SUBMITTED WITH SOIL BEARING CHARACTERISTICS TO THE ENGINEER FOR APPROVAL.

NOTE NO. 9 THRUST BLOCKING FOR PIPE 16" AND LARGER SHALL BE POURED AS PER DETAIL.

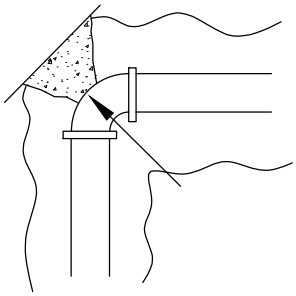

TYPICAL HORIZONTAL BEND
NOTE NO. 1

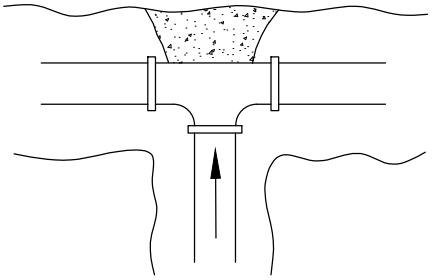

TEE AND WYE
NOTE NO. 2

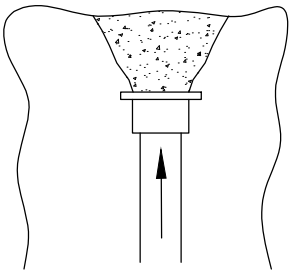

DEAD END OR PLUG
NOTE NO. 3

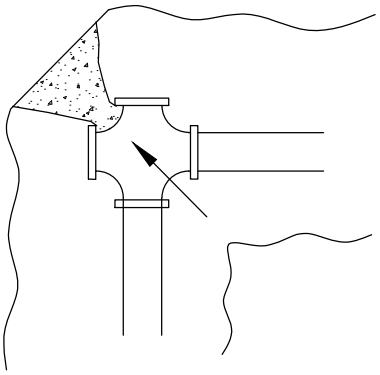

CROSS - NOTE NO. 4

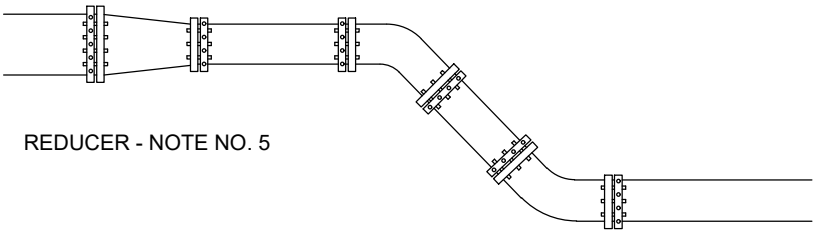

REDUCER - NOTE NO. 5

TYPICAL VERTICAL BENDS
NOTE NO. 6

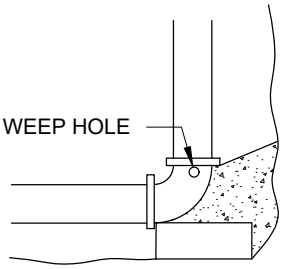

HYDRANT NOTE NO. 7

Bismarck Engineering Department	**CONCRETE THRUST BLOCKING**	SCALE: Not to Scale DATE: 3/2019	STANDARD DETAIL NO. **900-1**

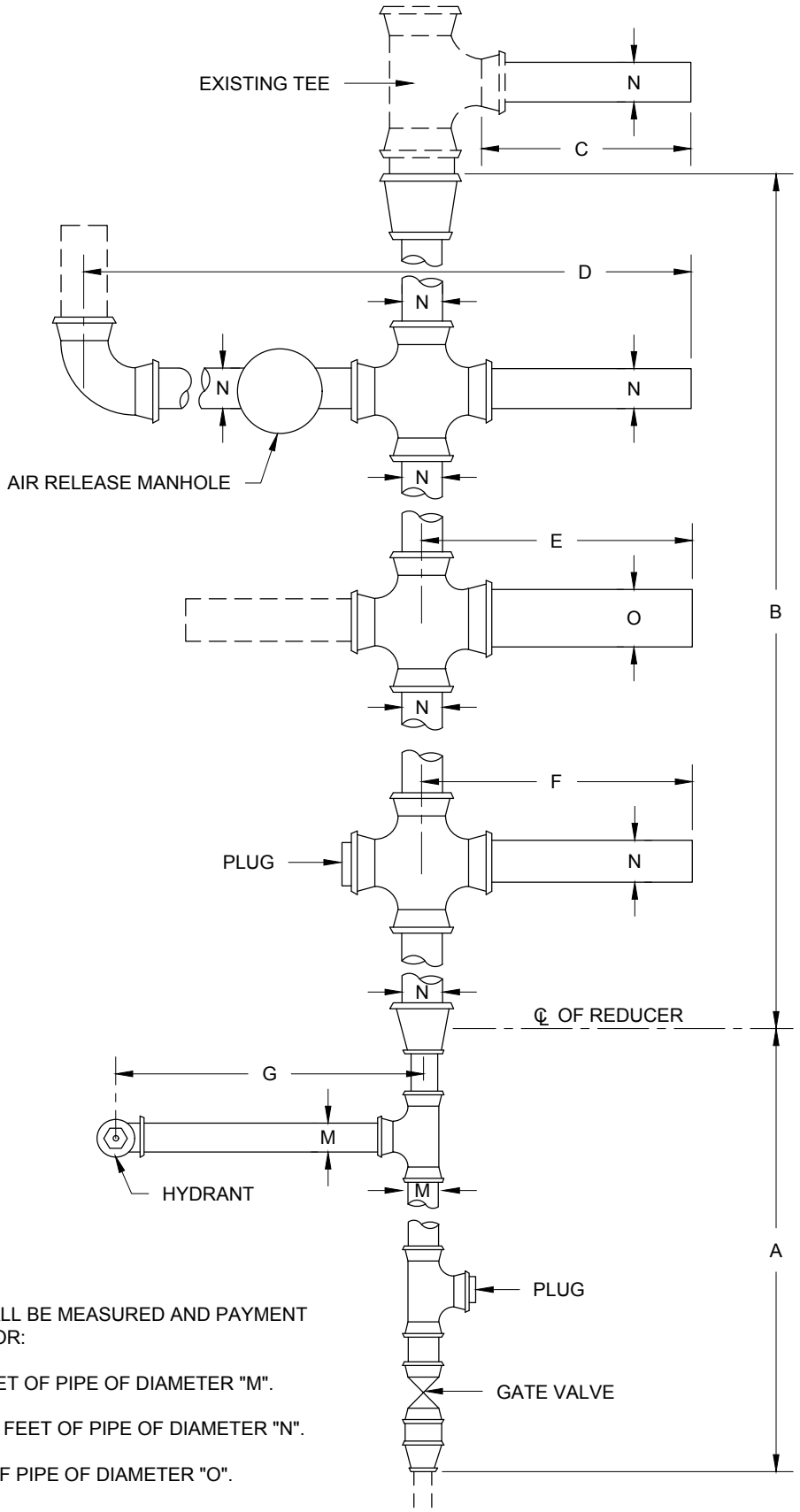

WATERMAIN SHALL BE MEASURED AND PAYMENT WILL BE MADE FOR:

A & G LINEAR FEET OF PIPE OF DIAMETER "M".

B,C,D & F LINEAR FEET OF PIPE OF DIAMETER "N".

E LINEAR FEET OF PIPE OF DIAMETER "O".

Bismarck Engineering Department	**WATERMAIN PAYMENT DIAGRAM**	SCALE: Not to Scale DATE: 3/2017	STANDARD DETAIL NO. **900-2**

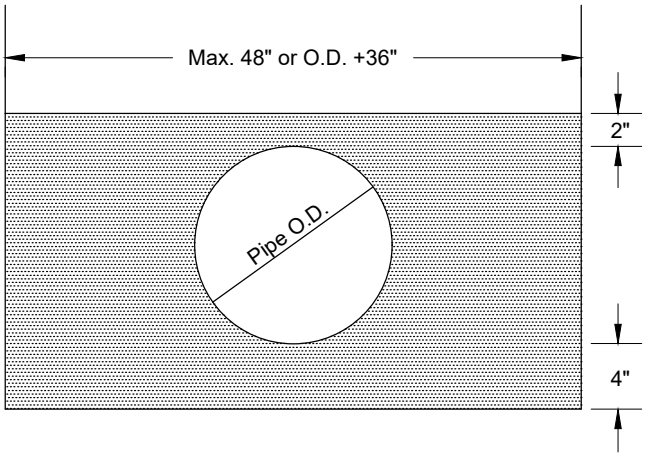

PIPE BEDDING QUANTITIES - WATERMAIN

6" to 18" Based on C900, C905 PVC or C909 PVCO

20" Based on CL250 DI

24" Based on CL250 DI

30" to 48" Based on CL150 DI

PIPE SIZE	TRENCH WIDTH	C.Y. / FT.	TONS / FT.
4"	48"	0.1287	0.2188
6"	48"	0.1496	0.2543
8"	48"	0.1693	0.2878
10"	48"	0.1862	0.3165
12"	49"	0.2068	0.3516
16"	54"	0.2638	0.4485
18"	56"	0.2905	0.4939
20"	58"	0.3175	0.5398
24"	62"	0.3726	0.6334
30"	68"	0.4578	0.7783
36"	74"	0.5468	0.9296
42"	81"	0.6521	1.1086
48"	87"	0.7497	1.2745

5 Tons / Manhole

2.5 Tons / Hydrant

0.1 Tons / LF of Service Line (2" & Under)

Bismarck Engineering Department	WATERMAIN PIPE BEDDING	SCALE: Not to Scale DATE: 3/2019	STANDARD DETAIL NO. 900-3

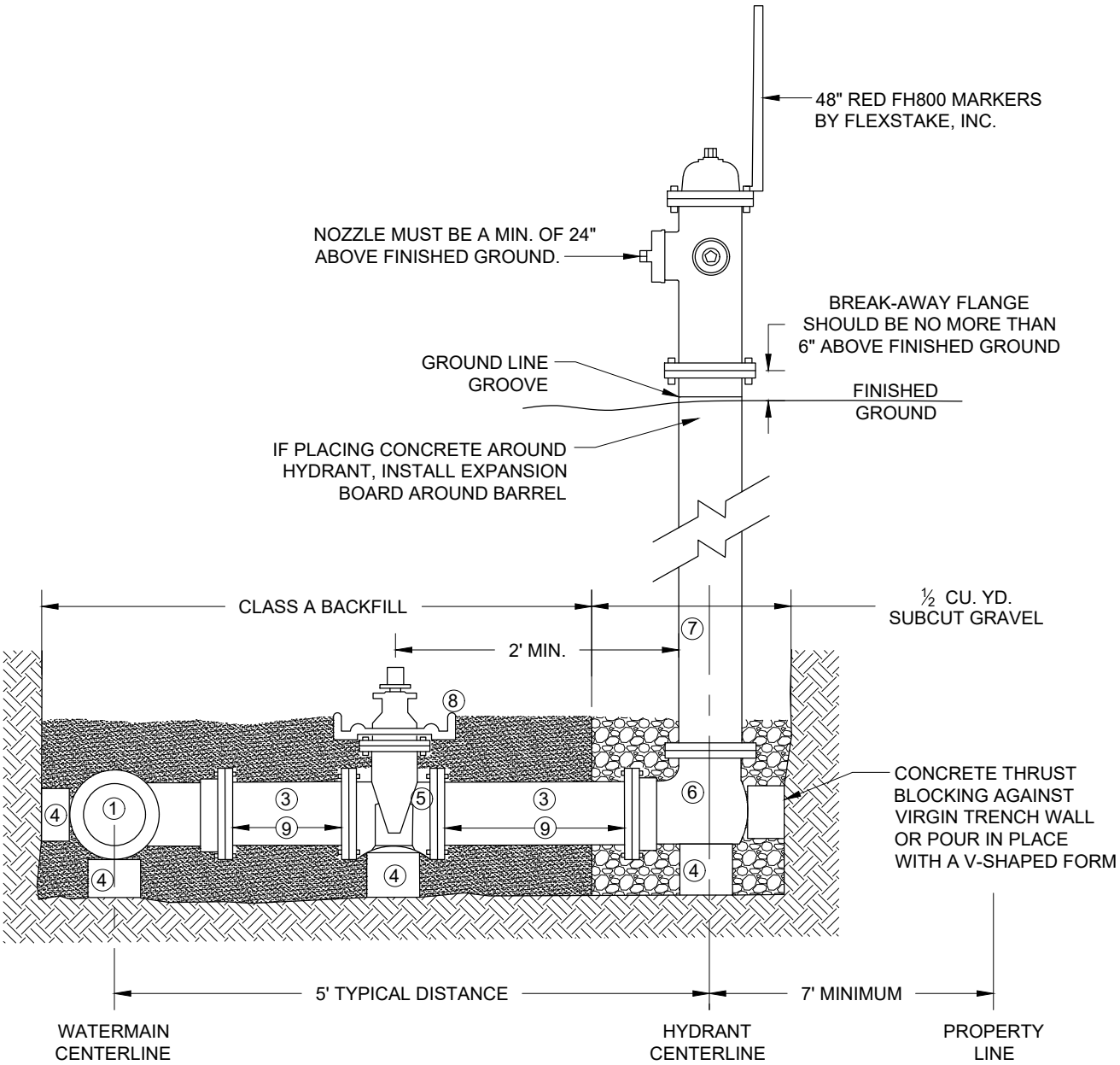

KEY:

① TEE	④ CONCRETE PAD MIN. 18" SQUARE X 6" THICK	⑦ HYDRANT
② ¾" - 1 ½" ROCK	⑤ GATE VALVE	⑧ GATE VALVE ADAPTER
③ HYDRANT LEAD	⑥ HYDRANT DRAIN OPENING	⑨ RESTRAINED JOINTS

NOTES:

1. ¾" - 1 ½" SIZE ROCK SHALL BE TO A LEVEL 6" ABOVE WASTE OPENING OR GREATER, WITH A MINIMUM 30" WIDE. MINIMUM QUANTITIY ½ CU. YD.
2. ALL HYDRANT LEADS SHALL BE C-900 AND SHALL HAVE A TYPICAL OVERALL LENGTH OF 5 FT. VALVE AND HYDRANT SHALL HAVE 2 FT. MINIMUM DISTANCE BETWEEN THEM.
3. WRAP HYDRANT UP TO GROUND LINE WITH 8 MILL (MIN.) POLY TAPE ENDS AND SEAMS. DO NOT ALLOW POLY OR CONCRETE TO COVER DRIP OR DRAIN OPENINGS.
4. ALL JOINTS SHALL BE RESTRAINED.

Bismarck Engineering Department	**HYDRANT SETTING**	SCALE: Not to Scale DATE: 03/2019	STANDARD DETAIL NO. **900-4**

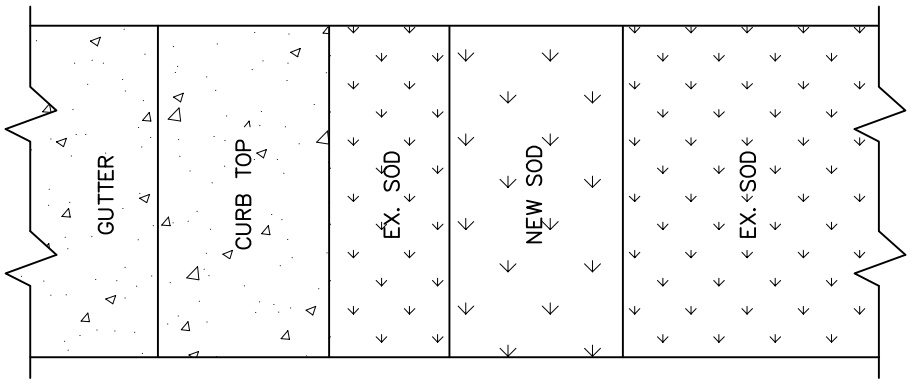

PLAN

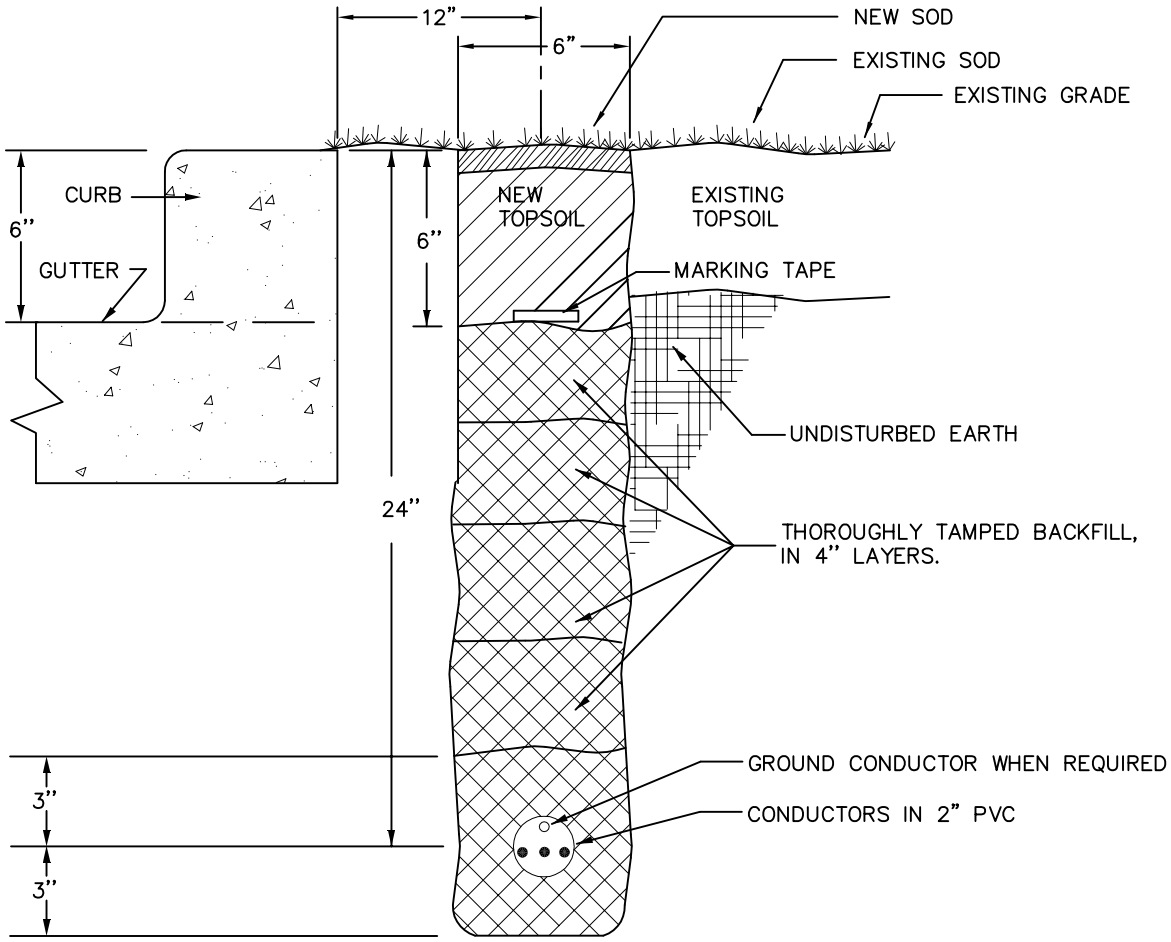

SECTION

Bismarck Engineering Department	TRENCH DETAIL IN CONDUIT	SCALE: Not to Scale DATE: 3/2017	STANDARD DETAIL NO. 1001-1

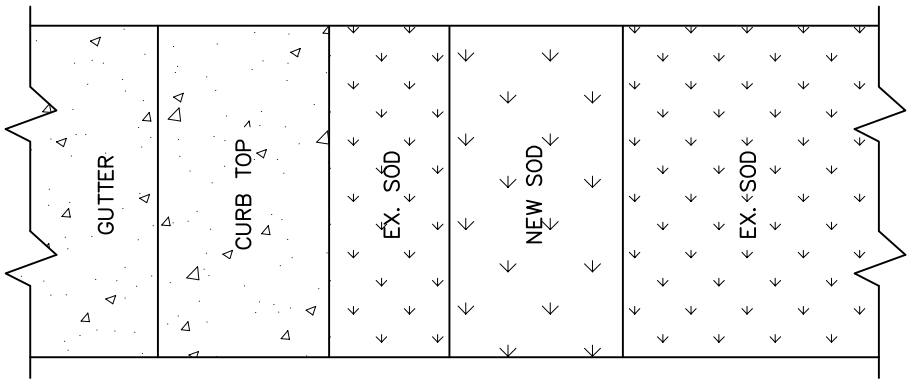

PLAN

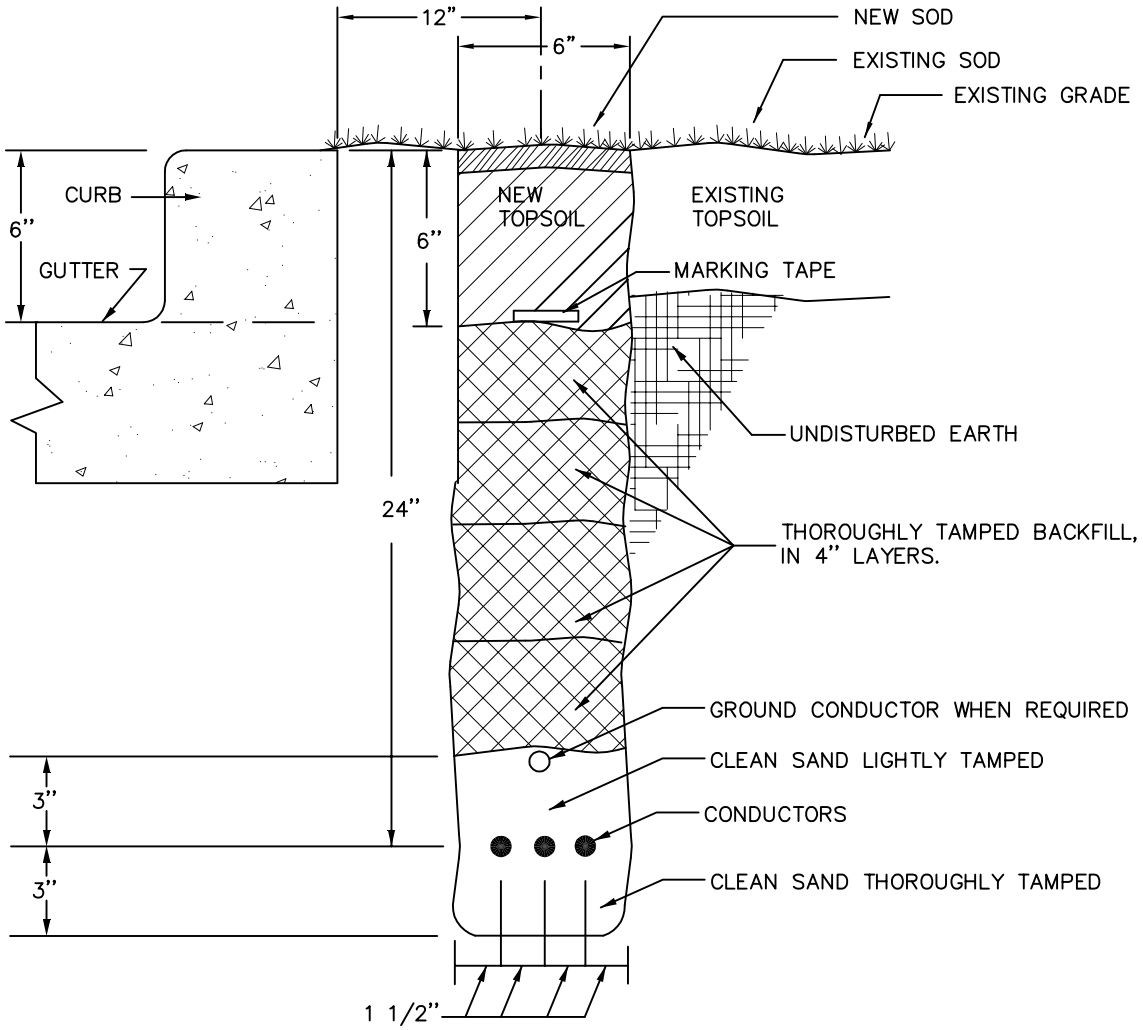

SECTION

Bismarck Engineering Department	**TRENCH DETAIL DIRECT BURIED**	SCALE: Not to Scale DATE: 3/2017	STANDARD DETAIL NO. **1001-2**

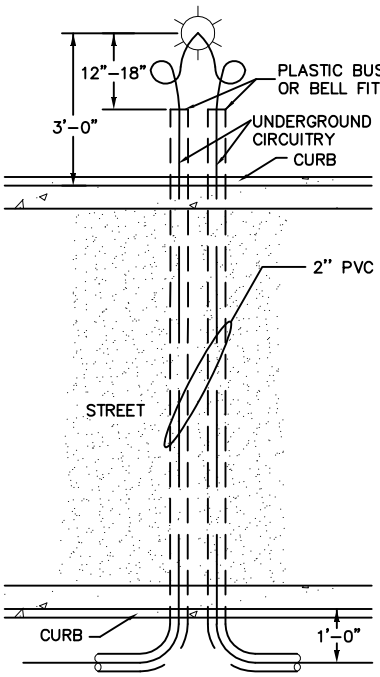

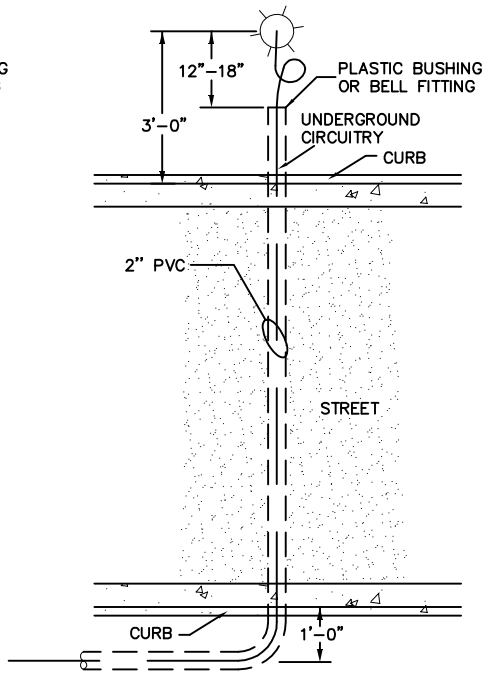

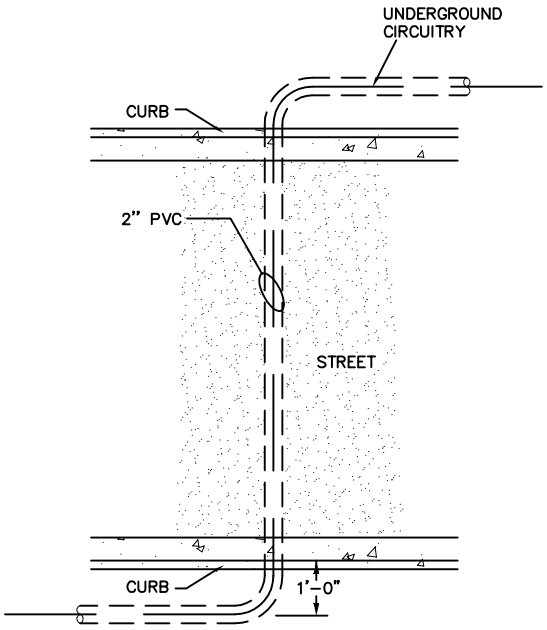

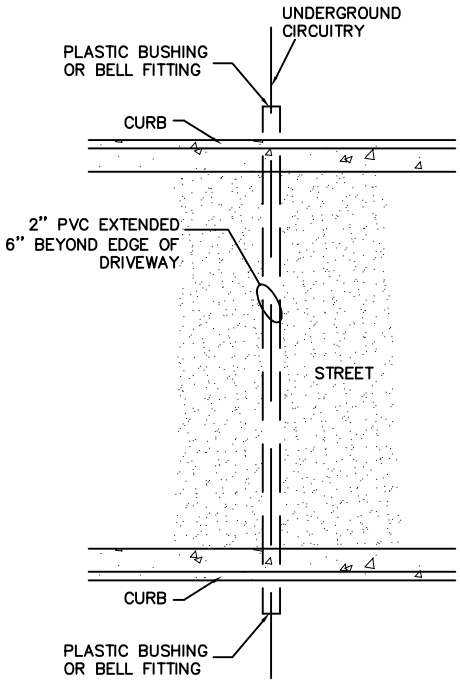

1. CONDUIT SHALL BE 24" BELOW GRADE AND SLOPED 3% FOR DRAINAGE.
2. PROVIDE 12"–18" LOOP IN CABLES AT EACH CONDUIT END.

1. CONDUIT SHALL BE 24" BELOW GRADE AND SLOPED 3% FOR DRAINAGE.
2. CONDUIT SHALL EXTEND 6" BEYOND CONCRETE AT BOTH ENDS.
3. PROVIDE 9" LOOP IN CABLES AT EACH CONDUIT END.

Bismarck Engineering Department	**STREET CROSSING DETAIL IN CONDUIT**	SCALE: Not to Scale DATE: 3/2017	STANDARD DETAIL NO. **1001-3**

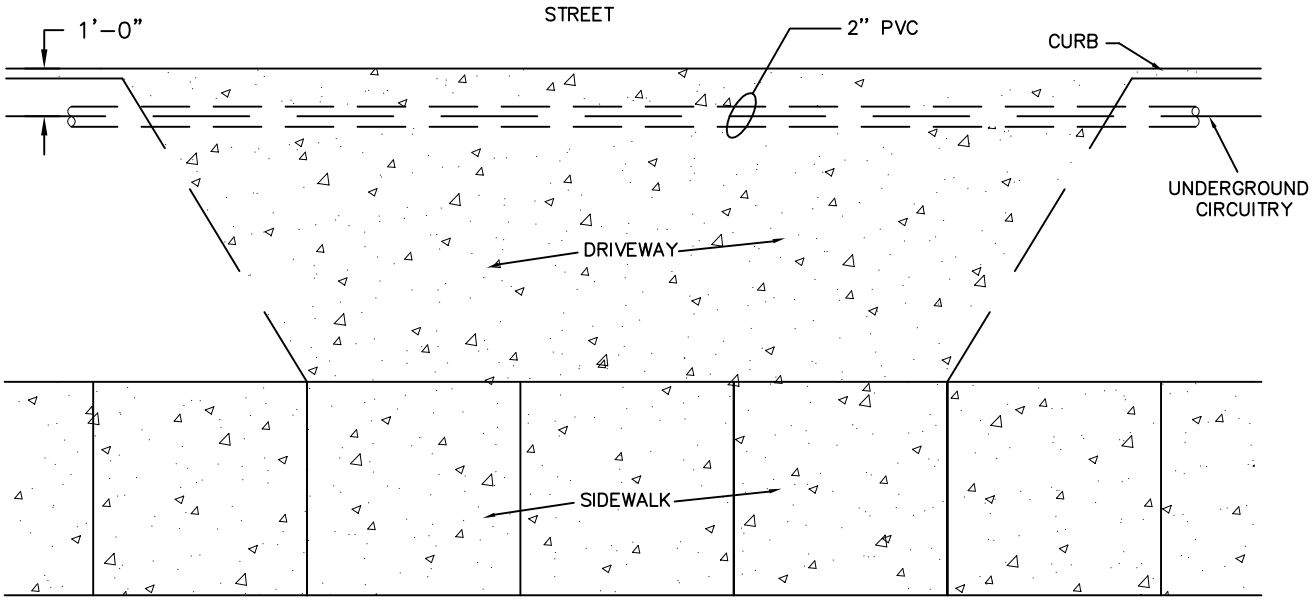

1. CONDUIT SHALL BE 24" BELOW GRADE AND SLOPED 3% FOR DRAINAGE.

2. PROVIDE 9" LOOP IN CABLES AT EACH CONDUIT END.

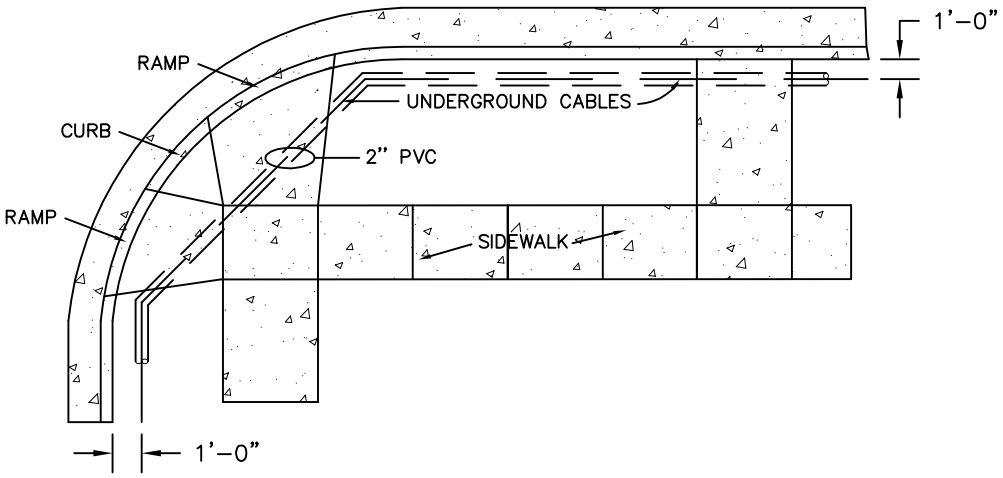

Bismarck Engineering Department	**CROSSING DETAIL IN CONDUIT**	SCALE: Not to Scale DATE: 3/2017	STANDARD DETAIL NO. **1001-4**

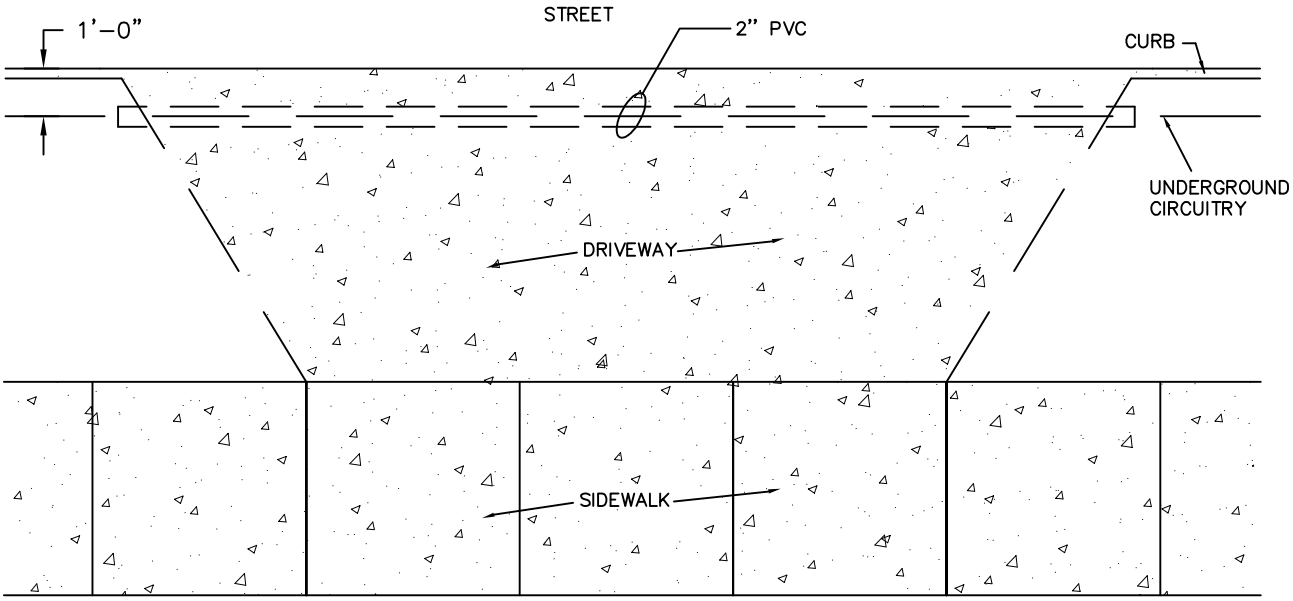

1. CONDUIT SHALL BE 24" BELOW GRADE AND SLOPED 3% FOR DRAINAGE.
2. CONDUIT SHALL EXTEND 6" BEYOND CONCRETE AT BOTH ENDS BUT NOT MORE THAN 1'–0".
3. PROVIDE 9" LOOP IN CABLES AT EACH CONDUIT END.
4. PROVIDE PLASTIC BUSHING OR BELL FITTING AT ALL CONDUIT ENDS.

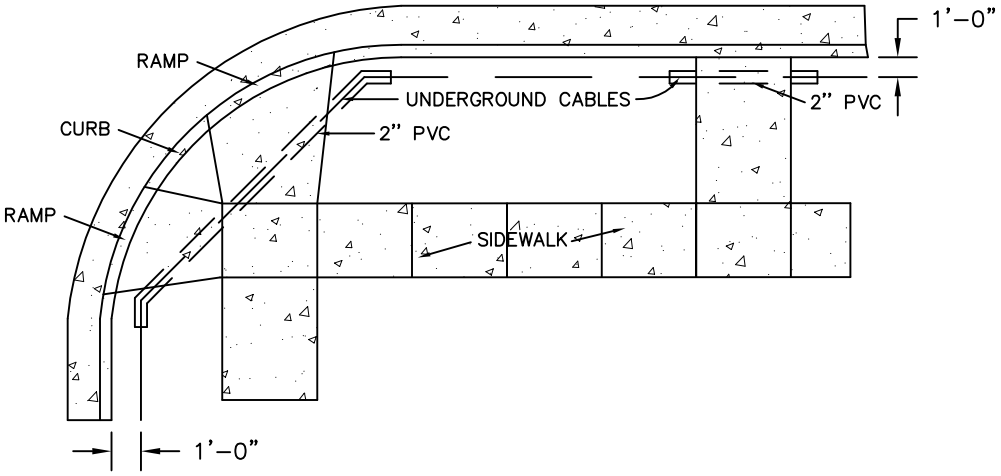

Bismarck Engineering Department	**CROSSING DETAIL DIRECT BURIED**	SCALE: Not to Scale DATE: 3/2017	STANDARD DETAIL NO. **1001-5**

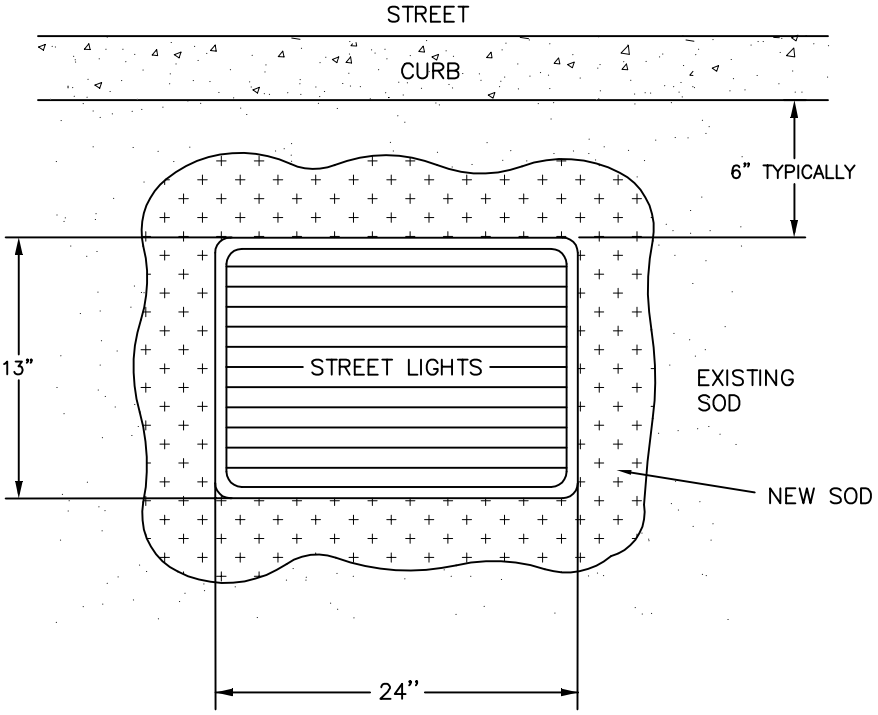

PLAN

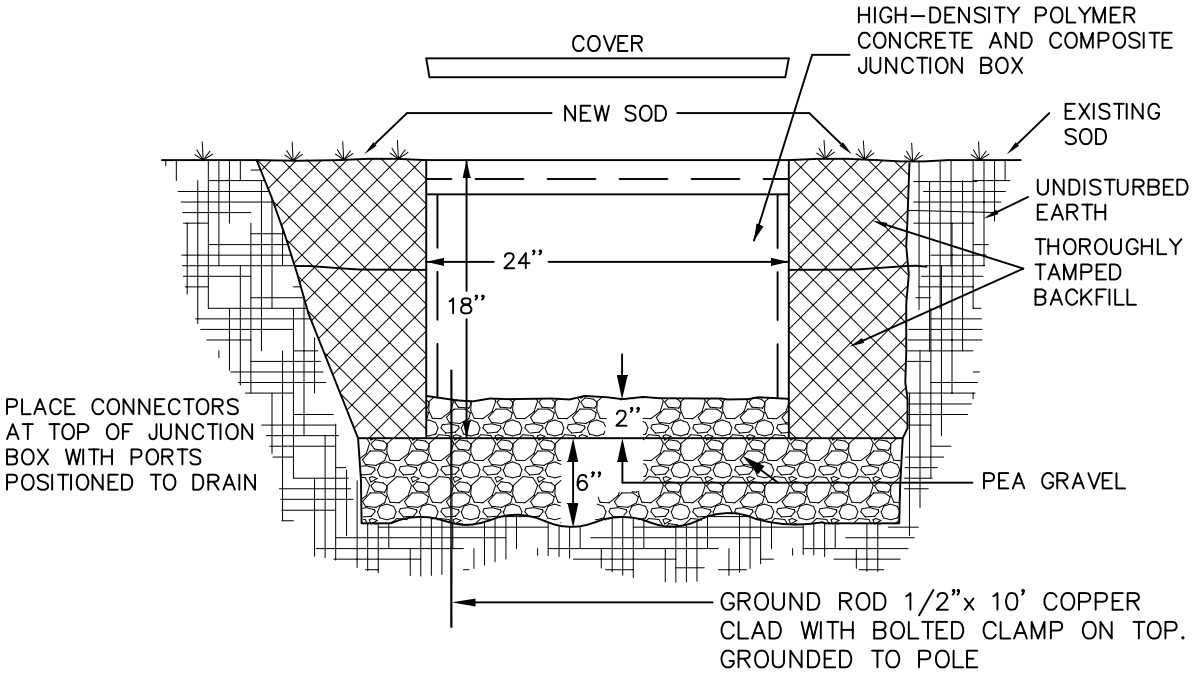

ELEVATION

Bismarck Engineering Department	JUNCTION BOX DETAIL	SCALE: Not to Scale DATE: 3/2017	STANDARD DETAIL NO. 1001-6

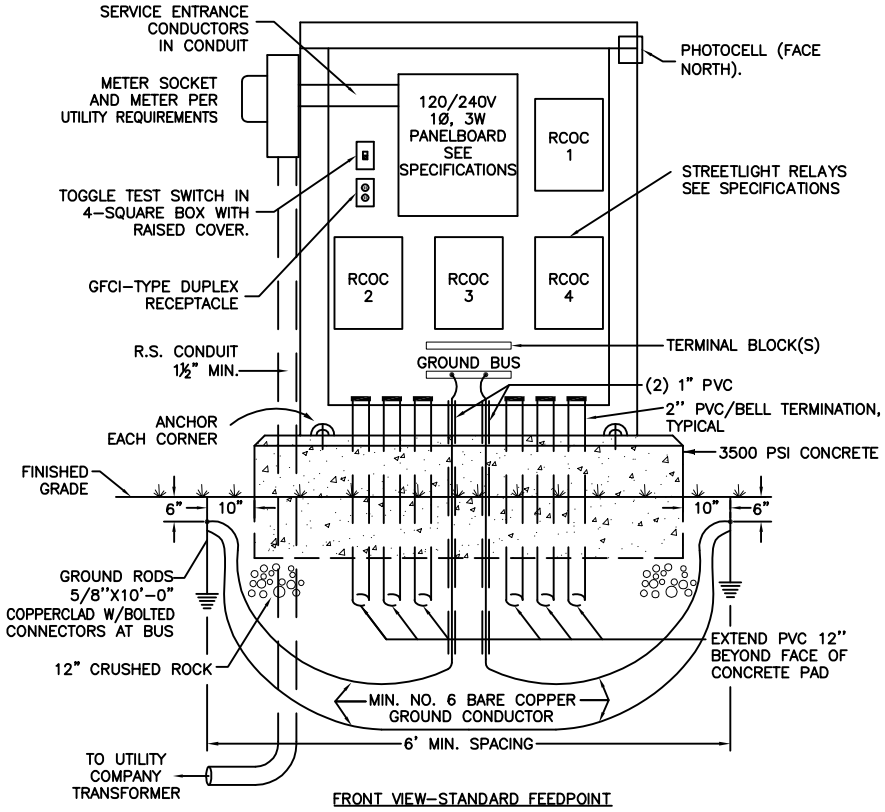

FRONT VIEW–STANDARD FEEDPOINT

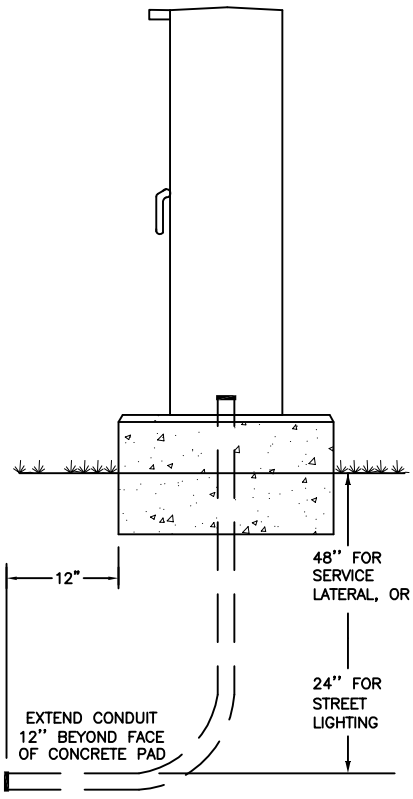

SIDE

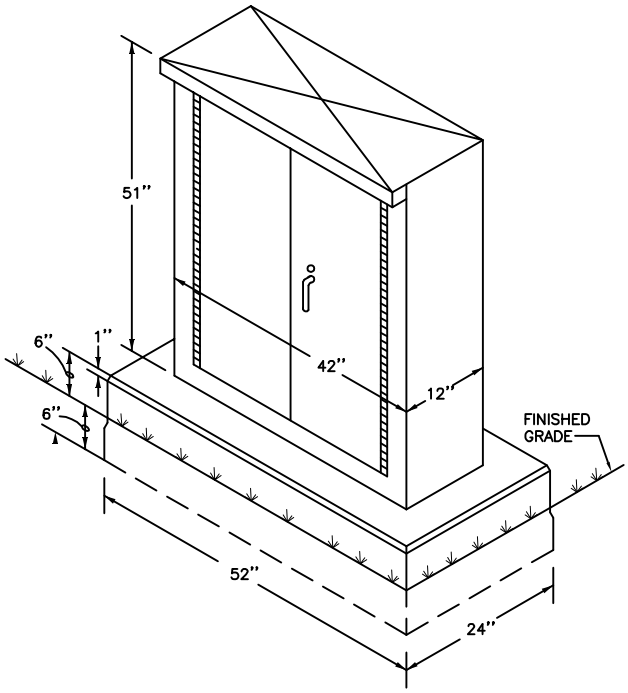

Bismarck Engineering Department	**PAD MOUNTED FEED POINT DETAIL**	SCALE: Not to Scale DATE: 3/2017	STANDARD DETAIL NO. **1001-7**

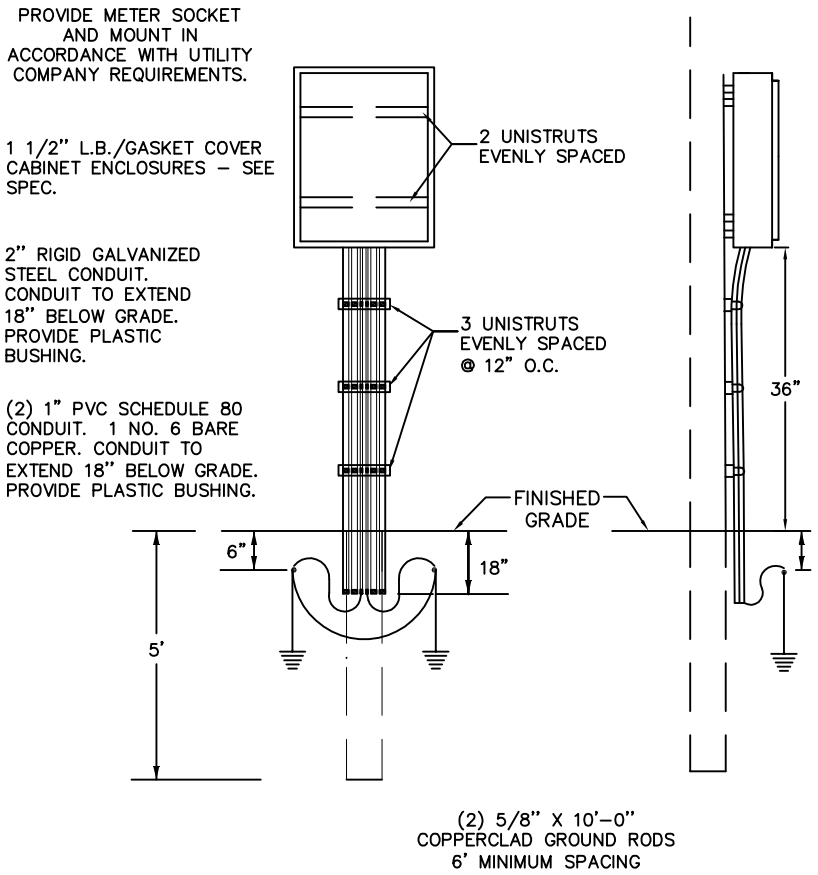

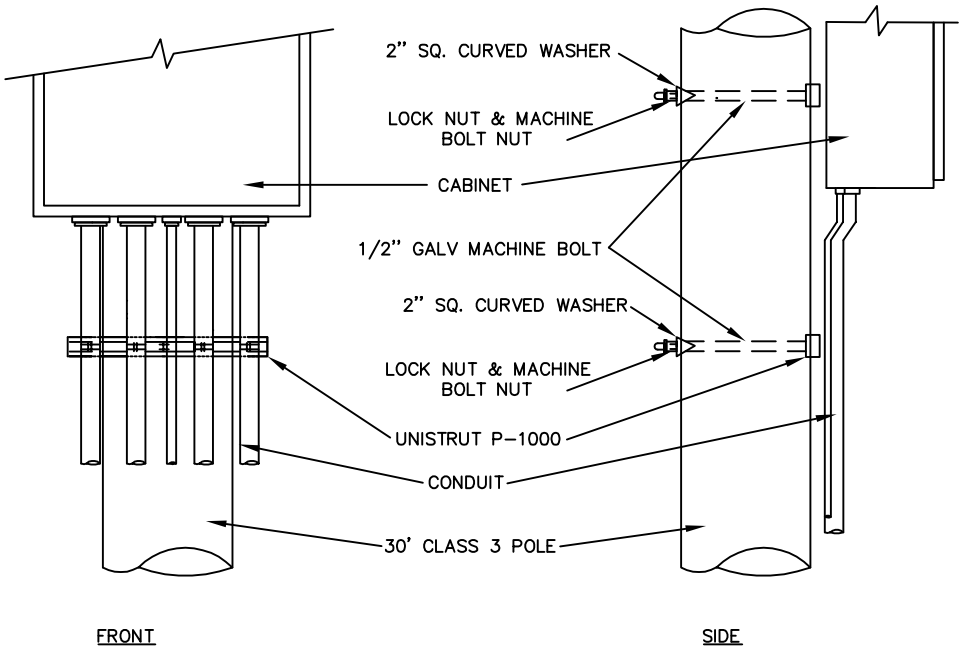

NOTE
PROVIDE UNISTRUT P–1280 END CAPS ON ALL UNISTRUT CHANNEL ENDS.

PROVIDE "STAND–OFFS" FOR ALL EQUIPMENT SHOWN TO BE MOUNTED ON EXISTING UTILITY COMPANY POLES.

Bismarck Engineering Department	**POLE MOUNTED FEED POINT DETAIL**	SCALE: Not to Scale DATE: 3/2017	STANDARD DETAIL NO. **1001-8**

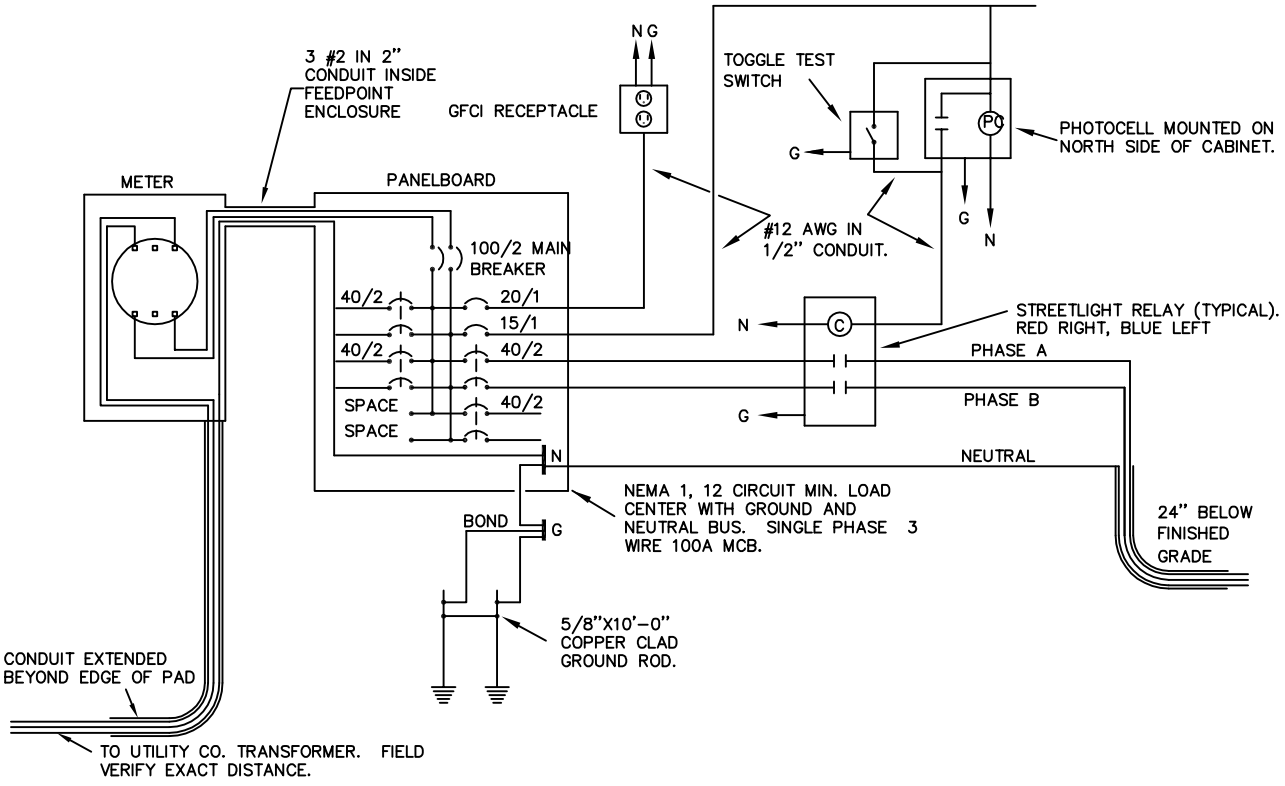

Bismarck Engineering Department	**FEED POINT WIRING DETAIL**	SCALE: Not to Scale DATE: 3/2017	STANDARD DETAIL NO. **1001-9**

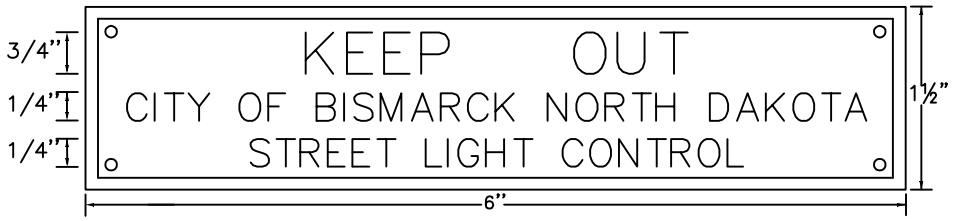

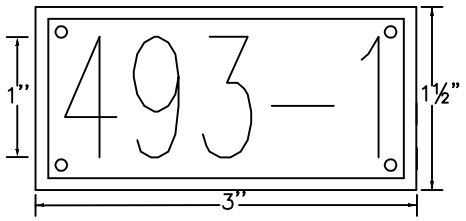

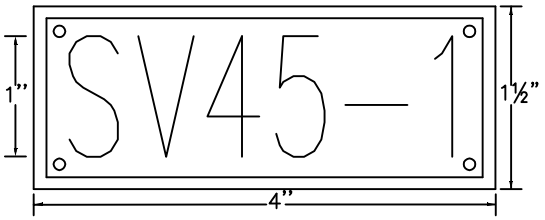

NOTE NO.1 - NAMEPLATES TO BE AFFIXED TO CABINET WITH STAINLESS STEEL OR ALUMINUM RIVETS.

Bismarck Engineering Department	**FEEDPOINT NAMEPLATE DETAIL**	SCALE: Not to Scale DATE: 3/2017	STANDARD DETAIL NO. **1001-10**

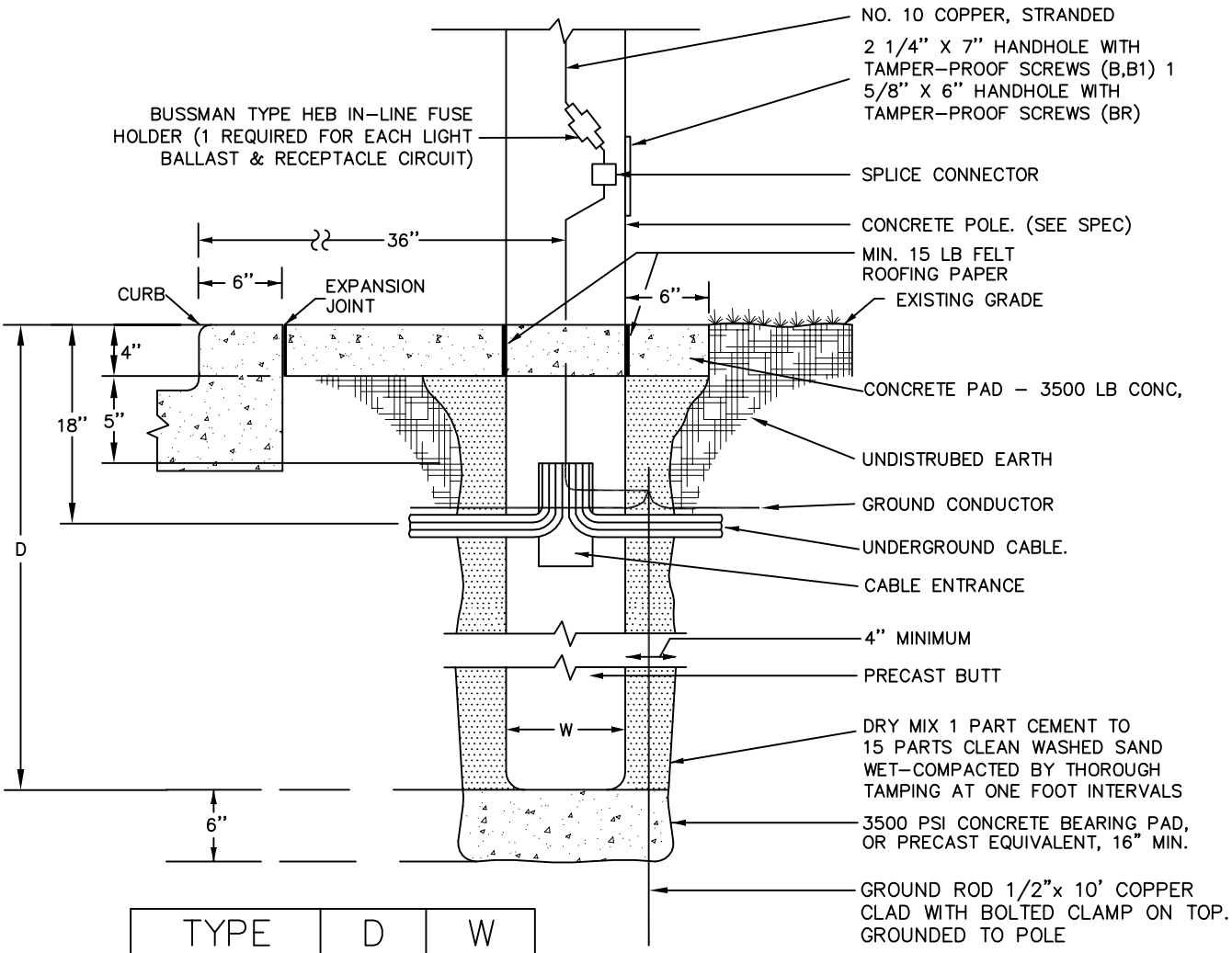

TYPE	D	W
BR, BL	3'-3"	6 1/8"
B, B1, L, L1	4'-11"	9"
D1, DL1, D2, DL2	4'-3"	8"

Bismarck Engineering Department	**EMBEDDED BASE DETAIL**	SCALE: Not to Scale DATE: 3/2017	STANDARD DETAIL NO. **1001-11**

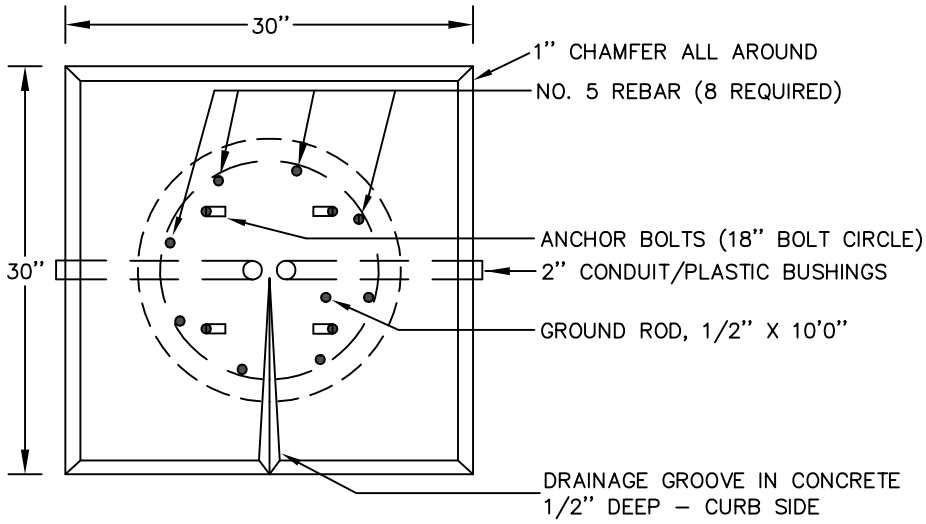

TOP VIEW

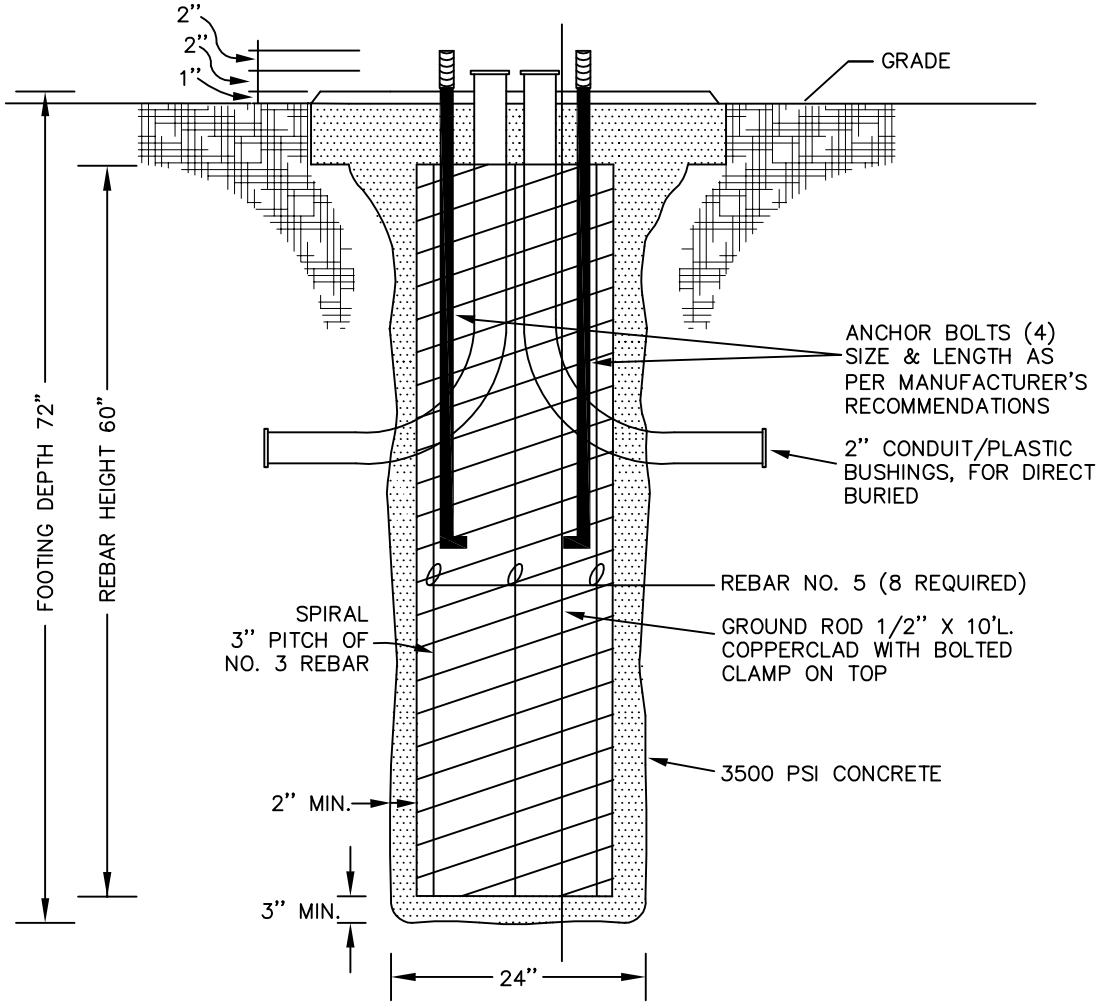

SIDE VIEW

Bismarck Engineering Department	**TYPE C, C1, CL & CL1 BASE DETAIL**	SCALE: Not to Scale DATE: 3/2017	STANDARD DETAIL NO. **1001-12**

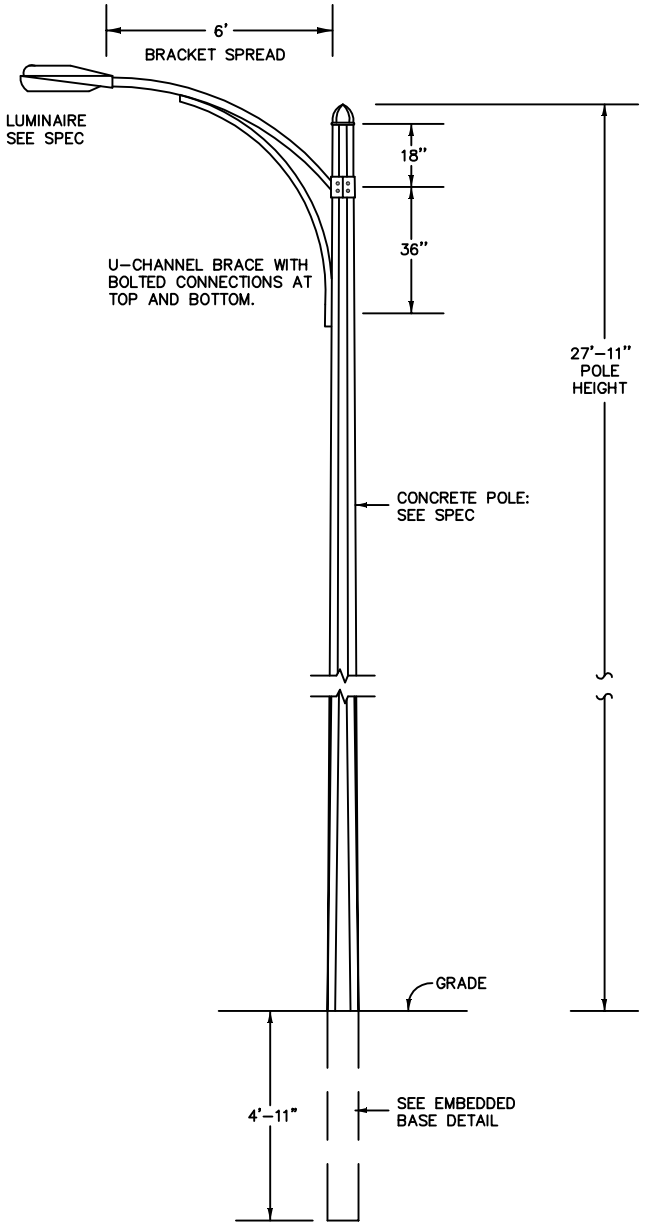

TYPE B, B1, L & L1 POLE DETAIL

NO SCALE

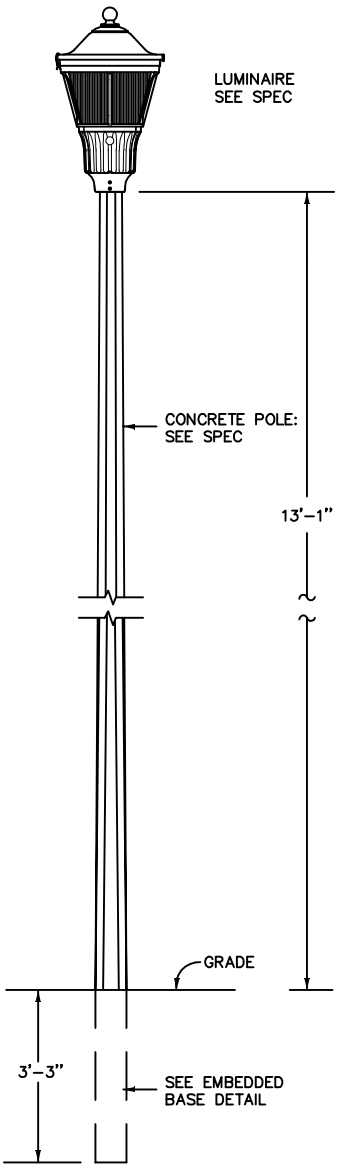

TYPE BR, BL POLE DETAIL

NO SCALE

Bismarck Engineering Department	**STREET LIGHT DETAIL**	SCALE: Not to Scale DATE: 3/2017	STANDARD DETAIL NO. **1001-13**

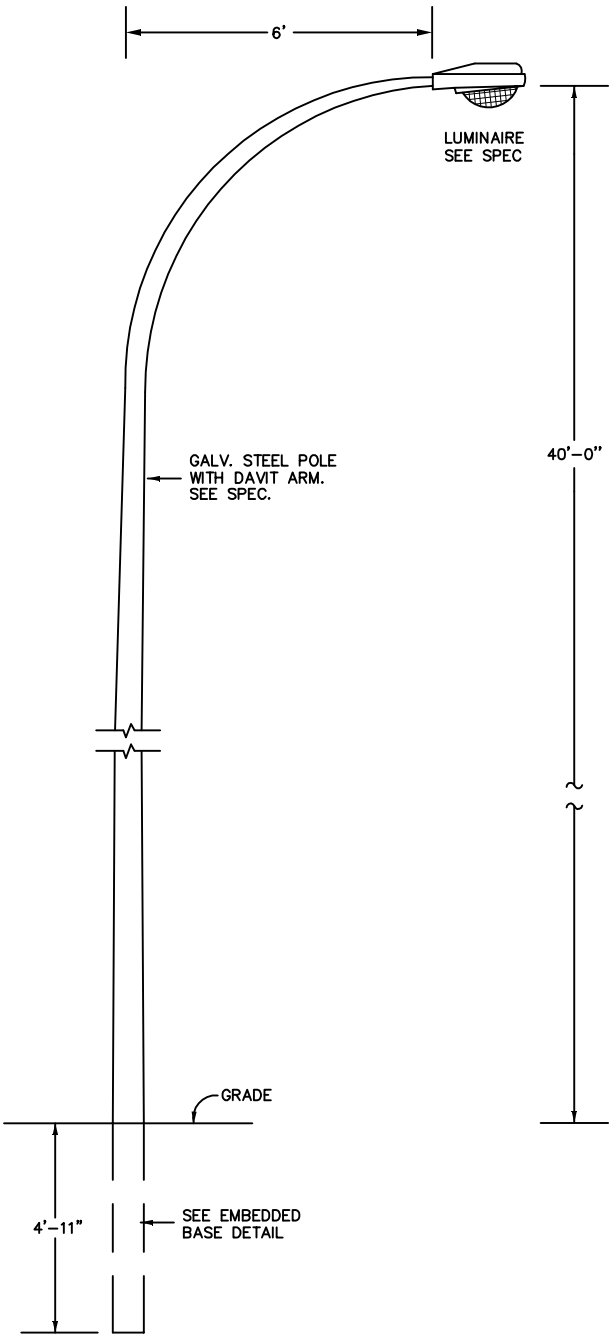

TYPE C, C1, CL & CL1 POLE DETAIL

NO SCALE

Bismarck Engineering Department	**STREET LIGHT DETAIL**	SCALE: Not to Scale DATE: 3/2017	STANDARD DETAIL NO. **1001-14**

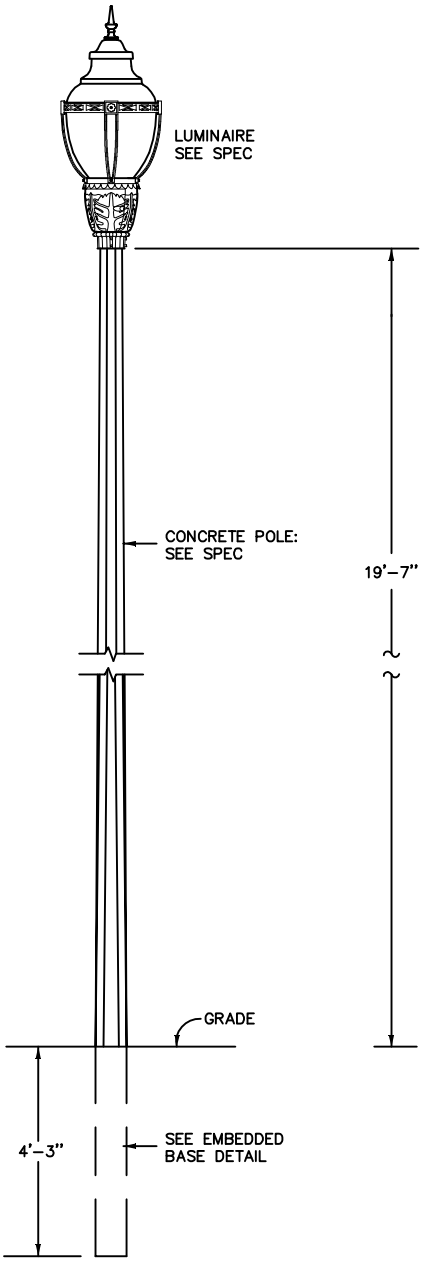

TYPE D1/DL1 POLE DETAIL

NO SCALE

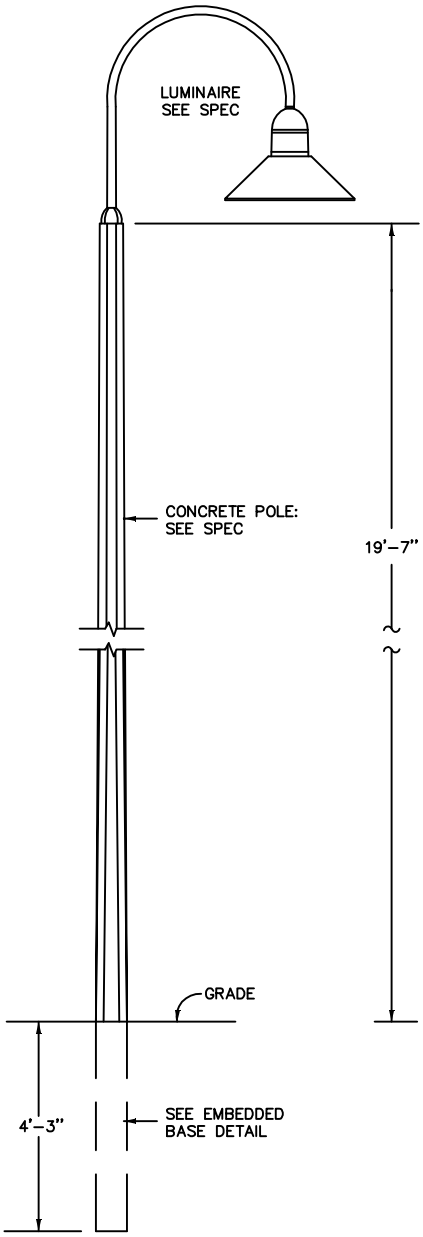

TYPE D2/DL2 POLE DETAIL

NO SCALE

Bismarck Engineering Department	**STREET LIGHT DETAIL**	SCALE: Not to Scale DATE: 3/2017	STANDARD DETAIL NO. **1001-15**

NOTE NO.1 - MANHOLE CASTING AND COVER SHALL BE AS DEFINED IN SECTION 1205.

NOTE NO.2 - ALLOWANCE FOR ADJUSTMENT - 0" TO 6" - SEE STANDARD DETAIL NO. 1206-1.

NOTE NO.3 - P2 GASKETED JOINT FOR 48" MANHOLES, CX-4 JOINT FOR ALL OTHER SIZES OF MANHOLES AND EXTERIOR SEAL BY PRESS-SEAL GASKET CORP. EZ WRAP AND EZ STIK NO. 4 PRIMER, SPECIALTY PRODUCTS "MAC WRAP", INFI-SHIELD EXTERNAL GATOR WRAP, OR AN APPROVED EQUAL.

NOTE NO.4 - IF PRECAST MANHOLE BASE IS USED, FLOOR SHALL BE GROUTED AND SLOPED, AS SHOWN, FROM 1\2 THE DIAMETER OF THE PIPE. SEE SECTION 1205 FOR PRECAST MANHOLE BASE REINFORCEMENT.

NOTE NO.5 - MANHOLE TOP SECTION SHALL BE ECCENTRIC FOR 48" MANHOLES.

NOTE NO.6 - CAST IN PLACE MANHOLE BASES SHALL BE DIMENSIONED AS SHOWN UNLESS OTHERWISE INDICATED. BASES SHALL BE REINFORCED WITH NO.4 REBAR SPACED 15" ON CENTER BOTH WAYS.

NOTE NO.7 - I/I BARRIER AS MANUFACTURED BY AP/M PERMAFORM OR AN APPROVED EQUAL. ADJUSTMENT RINGS SHALL NOT EXCEED THE HEIGHT OF THE I/I BARRIER.

NOTE NO.8 - STEPS SHALL NOT BE PLACED IN SANITARY SEWER, STORM SEWER OR AIR RELEASE MANHOLES OR INLETS UNLESS SPECIFIED. IF SPECIFIED, THE MANHOLE STEPS SHALL BE DELTA SUREFOOT OR APPROVED EQUAL. STEPS SHALL BE SPACED 16" ON CENTER.

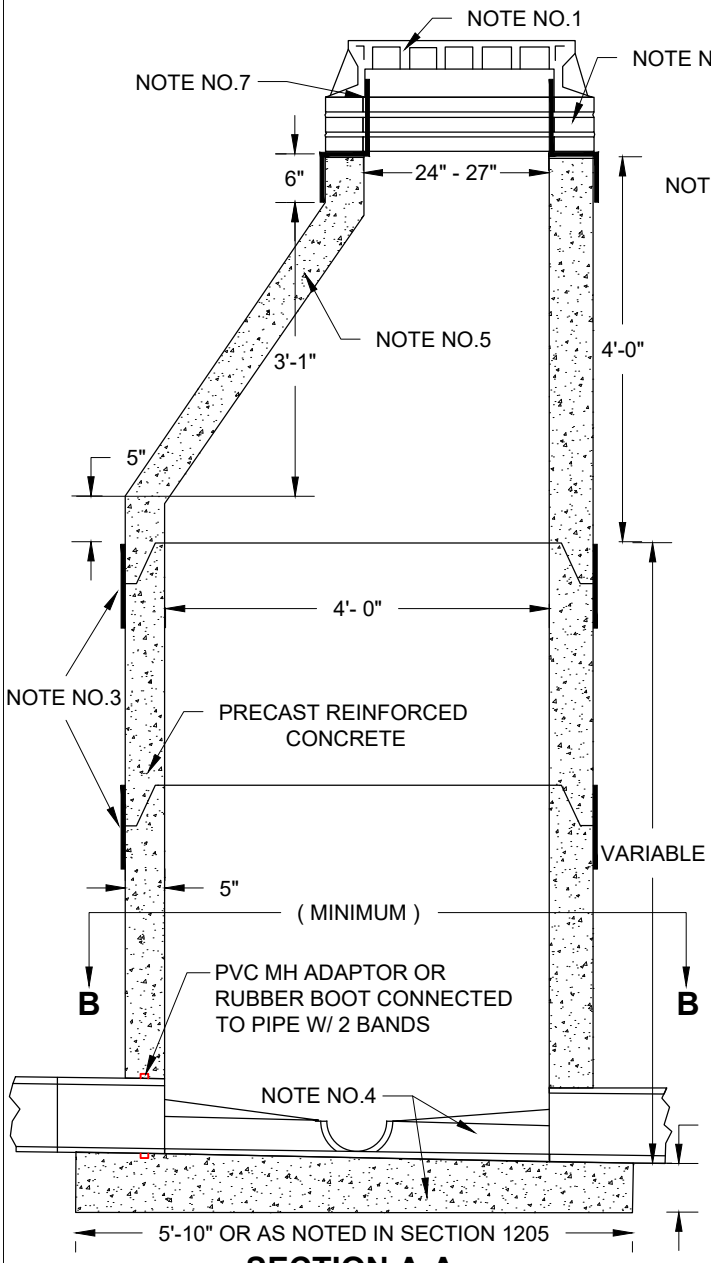

SECTION A-A

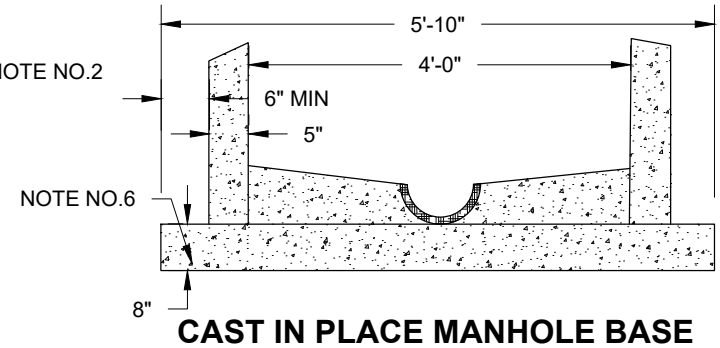

CAST IN PLACE MANHOLE BASE

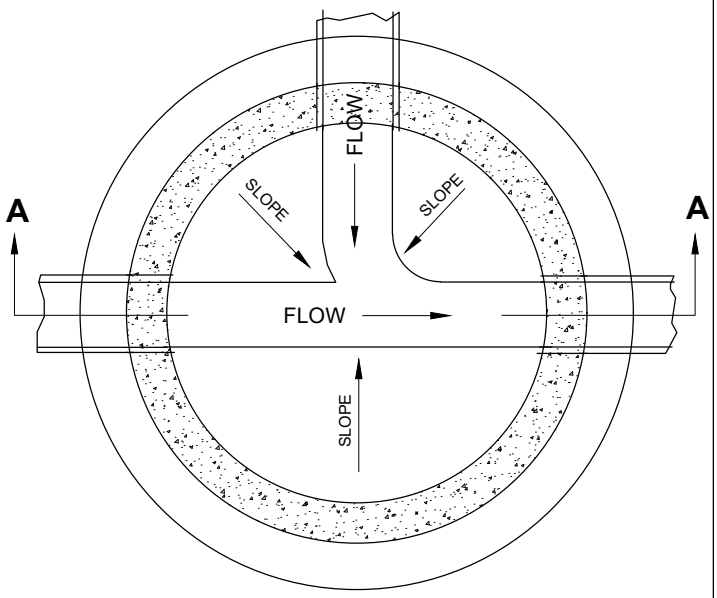

SECTION B-B

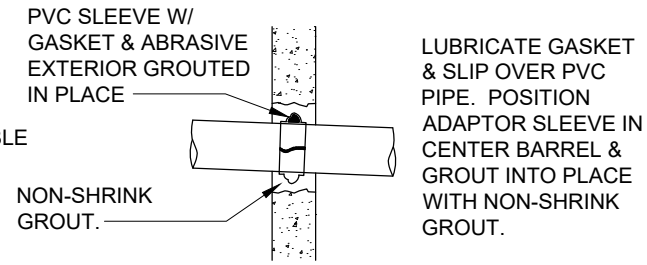

PVC MANHOLE ADAPTOR

Bismarck Engineering Department	SANITARY SEWER MANHOLE	SCALE: Not to Scale DATE: 3/2019	STANDARD DETAIL NO. 1205-1

NOTE NO.1 - MANHOLE CASTING AND COVER SHALL BE AS DEFINED IN SECTION 1205.

NOTE NO.2 - ALLOWANCE FOR ADJUSTMENT - 0" TO 6" - SEE STANDARD DETAIL NO. 1206-1.

NOTE NO.3 - P2 GASKETED JOINT FOR 48" MANHOLES, CX-4 JOINT FOR ALL OTHER SIZES OF MANHOLES AND EXTERIOR SEAL BY PRESS-SEAL GASKET CORP. EZ WRAP AND EZ STIK NO. 4 PRIMER, SPECIALTY PRODUCTS "MAC WRAP", INFI-SHIELD EXTERNAL GATOR WRAP, OR AN APPROVED EQUAL.

NOTE NO.4 - IF PRECAST MANHOLE BASE IS USED, FLOOR SHALL BE GROUTED AND SLOPED, AS SHOWN, FROM 1\2 THE DIAMETER OF THE PIPE. SEE SECTION 1205 FOR PRECAST MANHOLE BASE REINFORCEMENT.

NOTE NO.5 - MANHOLE TOP SECTION SHALL BE ECCENTRIC FOR 48" MANHOLES.

NOTE NO.6 - CAST IN PLACE MANHOLE BASES SHALL BE DIMENSIONED AS SHOWN UNLESS OTHERWISE INDICATED. BASES SHALL BE REINFORCED WITH NO.4 REBAR SPACED 15" ON CENTER BOTH WAYS.

NOTE NO.7 - ENCASE PIPE AND ELBOW IN CONCRETE. CONCRETE SHALL BE NOT LESS THAN 6" THICK, MEASURED FROM THE OUTSIDE WALL OF THE PIPE.

NOTE NO.8 - I/I BARRIER AS MANUFACTURED BY AP/M PERMAFORM OR AN APPROVED EQUAL, IF SPECIFIED. ADJUSTMENT RINGS SHALL NOT EXCEED THE HEIGHT OF THE I/I BARRIER.

NOTE NO.9 - STEPS SHALL NOT BE PLACED IN SANITARY SEWER, STORM SEWER OR AIR RELEASE MANHOLES OR INLETS UNLESS SPECIFIED. IF SPECIFIED, THE MANHOLE STEPS SHALL BE DELTA SUREFOOT OR APPROVED EQUAL. STEPS SHALL BE SPACED 16" ON CENTER.

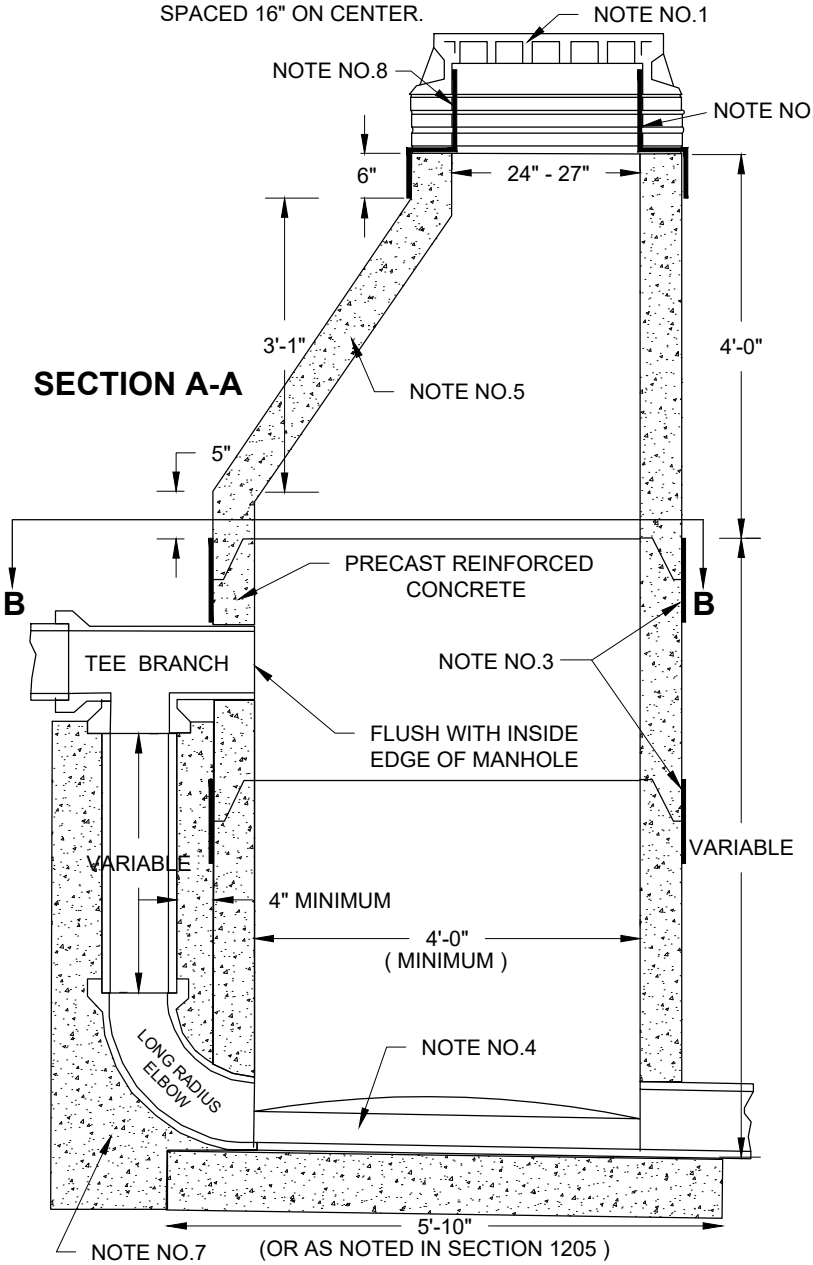

SECTION A-A

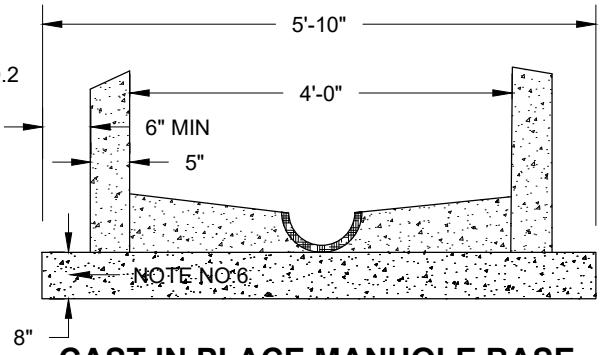

CAST IN PLACE MANHOLE BASE

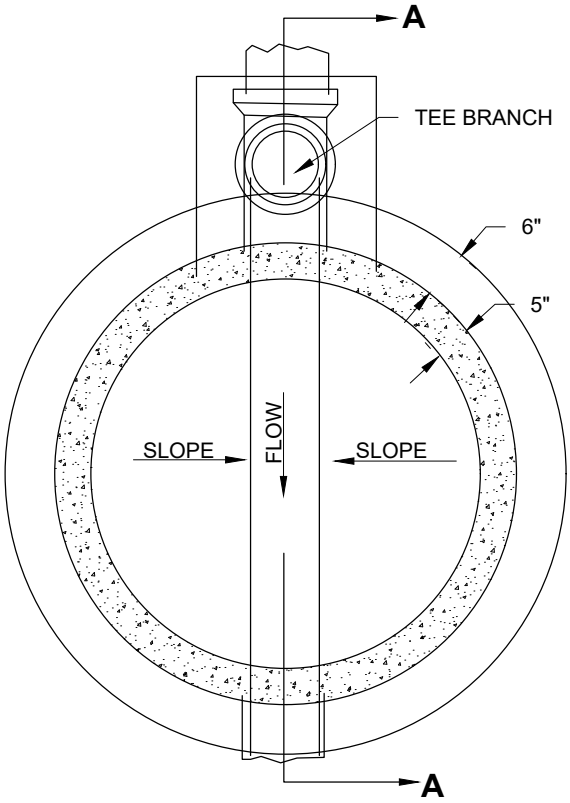

SECTION B-B

Bismarck Engineering Department	SANITARY SEWER DROP MANHOLE	SCALE: Not to Scale DATE: 3/2019	STANDARD DETAIL NO. 1205-2

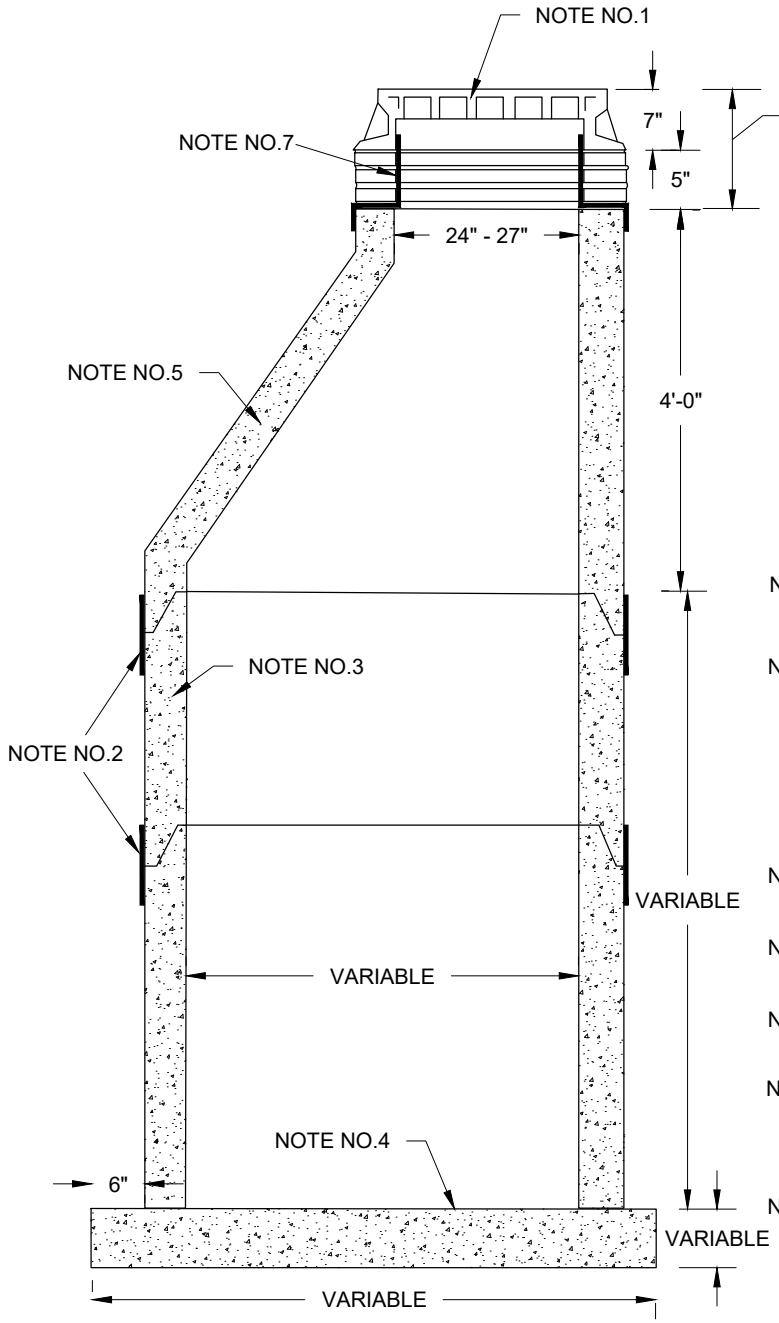

RECOMMENDED PRECAST SIZE REQUIREMENTS

BARREL DIAMETER	MAXIMUM SIZE RCP		
	2 @ 90	2 @ 180	RCP
48"	15"	30"	33"
54"	18"	36"	36"
60"	21"	42"	42"
66"	24"	48"	48"
72"	30"	48"	48"

NOTE NO.1 - MANHOLE CASTING SHALL BE AS DEFINED IN SECTION 1205.

NOTE NO.2 - P2 GASKETED JOINT FOR 48" MANHOLES, CX-4 JOINT FOR ALL OTHER SIZES OF MANHOLES AND EXTERIOR SEAL BY PRESS-SEAL GASKET CORP. EZ WRAP AND EZ STIK NO. 4 PRIMER, SPECIALTY PRODUCTS "MAC WRAP", INFI-SHIELD EXTERNAL GATOR WRAP, OR AN APPROVED EQUAL.

NOTE NO.3 - PRECAST CONCRETE MANHOLE SHALL CONFORM TO ASTM C478, WALL B.

NOTE NO.4 - PRECAST REINFORCED CONCRETE MANHOLE BASES SHALL CONFORM TO SECTION 1205.

NOTE NO.5 - MANHOLE TOP SECTION SHALL BE ECCENTRIC FOR 48" MANHOLES

NOTE NO.7 - I/I BARRIER AS MANUFACTURED BY AP/M PERMAFORM OR AN APPROVED EQUAL. ADJUSTMENT RINGS SHALL NOT EXCEED THE HEIGHT OF THE I/I BARRIER.

NOTE NO.8 - STEPS SHALL NOT BE PLACED IN SANITARY SEWER, STORM SEWER OR AIR RELEASE MANHOLES OR INLETS UNLESS SPECIFIED. IF SPECIFIED, THE MANHOLE STEPS SHALL BE DELTA SUREFOOT OR APPROVED EQUAL. STEPS SHALL BE SPACED 16" ON CENTER.

Bismarck Engineering Department	STORM SEWER MANHOLE	SCALE: Not to Scale DATE: 3/2019	STANDARD DETAIL NO. 1205-3

NOTE NO.1 - MANHOLE CASTING AND COVER SHALL BE AS DEFINED IN SECTION 1205.

NOTE NO.2 - EXTERIOR SEAL BY PRESS-SEAL GASKET CORP. EZ WRAP AND EZ STIK NO. 4 PRIMER, SPECIALTY PRODUCTS "MAC WRAP", INFI-SHIELD EXTERNAL GATOR WRAP, OR AN APPROVED EQUAL.

NOTE NO.3 - I/I BARRIER AS MANUFACTURED BY AP/M PERMAFORM OR AN APPROVED EQUAL. ADJUSTMENT RINGS SHALL NOT EXCEED THE HEIGHT OF THE I/I BARRIER.

NOTE NO.4 - STEPS SHALL NOT BE PLACED IN SANITARY SEWER, STORM SEWER OR AIR RELEASE MANHOLES OR INLETS UNLESS SPECIFIED. IF SPECIFIED, THE MANHOLE STEPS SHALL BE DELTA SUREFOOT OR APPROVED EQUAL. STEPS SHALL BE SPACED 16" ON CENTER.

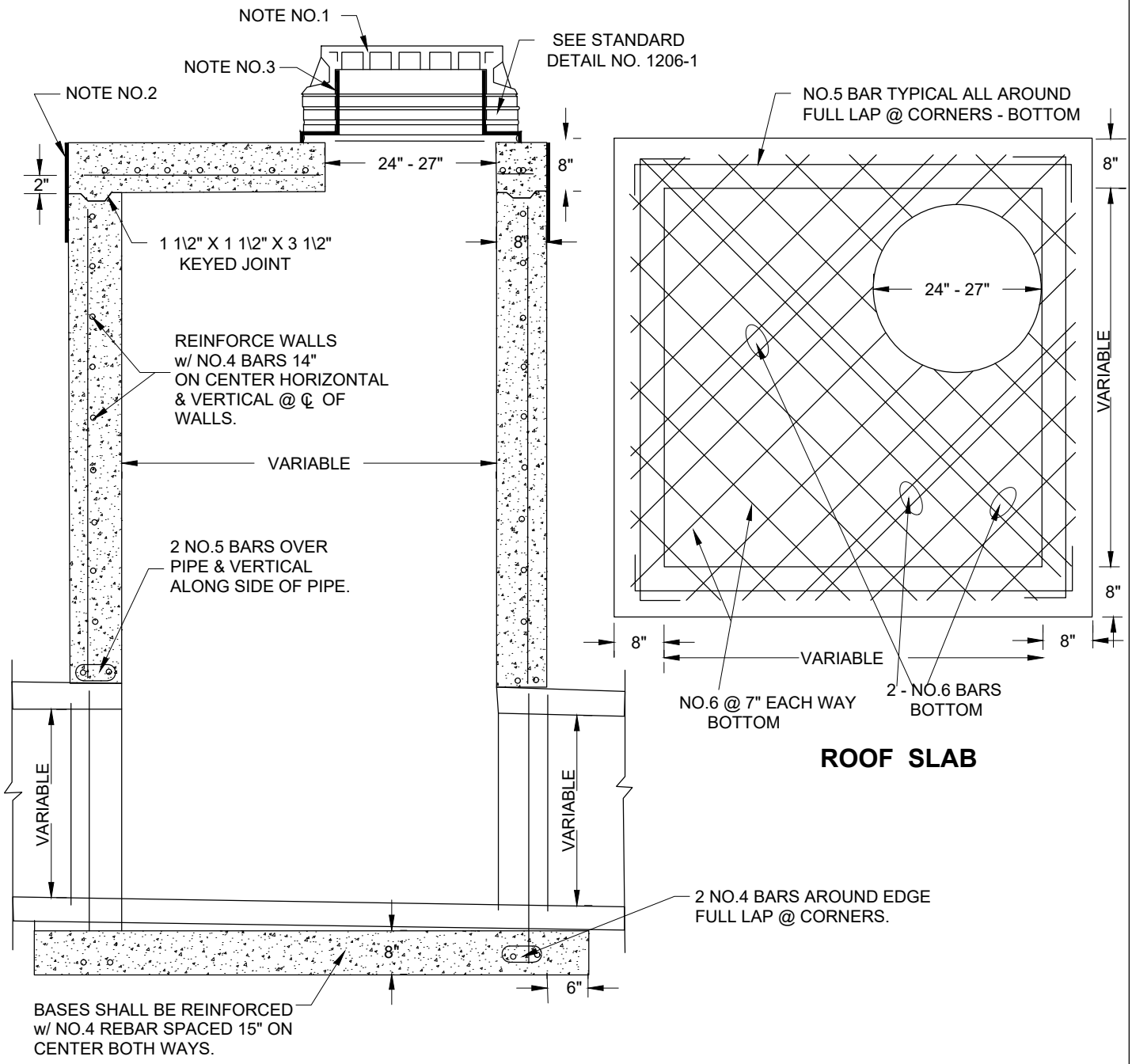

Bismarck Engineering Department	CAST IN PLACE STORM SEWER MANHOLE	SCALE: Not to Scale DATE: 3/2019	STANDARD DETAIL NO. 1205-4

NOTE NO.1 - INLET CASTING SHALL BE AS DEFINED IN SECTION 1205.

NOTE NO.2 - ALLOWANCE FOR ADJUSTMENT SHALL BE 1 1/2" MINIMUM TO 3" MAXIMUM. SEE STANDARD DETAIL NO.1206-1.

NOTE NO.3 - P2 GASKETED JOINT FOR 48" MANHOLES, CX-4 JOINT FOR ALL OTHER SIZES OF MANHOLES AND EXTERIOR SEAL BY PRESS-SEAL GASKET CORP. EZ WRAP AND EZ STIK NO. 4 PRIMER, SPECIALTY PRODUCTS "MAC WRAP", INFI-SHIELD EXTERNAL GATOR WRAP, OR AN APPROVED EQUAL.

NOTE NO.4 - USE PRECAST SECTION FOR THREE PIPES OR LESS UP TO 15" DIAMETER. FOR MORE THAN THREE PIPES OR FOR LARGER PIPES, A SECTION SHALL BE POURED IN PLACE ALLOWING A MINIMUM OF 3" FROM THE BOTTOM OF THE ROOF SLAB TO THE LARGEST OR HIGHEST PIPE. SEE STANDARD DETAIL NO. 1205-4 FOR ROOF SLAB, BASE & OTHER DIMENSIONS.

NOTE NO.5 - BOLTS FOR CASTING SHALL BE TEMPER FINISH, DOUBLE HEAT TREATED-1038 S.A.E. GRADE 5, WITH CAD-DICHROMATE PLATING.

NOTE NO.6 - SLOPE FLOOR TO INVERT OF LOWEST PIPE.

NOTE NO.7 - I/I BARRIER AS MANUFACTURED BY AP/M PERMAFORM OR AN APPROVED EQUAL. ADJUSTMENT RINGS SHALL NOT EXCEED THE HEIGHT OF THE I/I BARRIER.

NOTE NO.8 - STEPS SHALL NOT BE PLACED IN SANITARY SEWER, STORM SEWER OR AIR RELEASE MANHOLES OR INLETS UNLESS SPECIFIED. IF SPECIFIED, THE MANHOLE STEPS SHALL BE DELTA SUREFOOT OR APPROVED EQUAL. STEPS SHALL BE SPACED 16" ON CENTER.

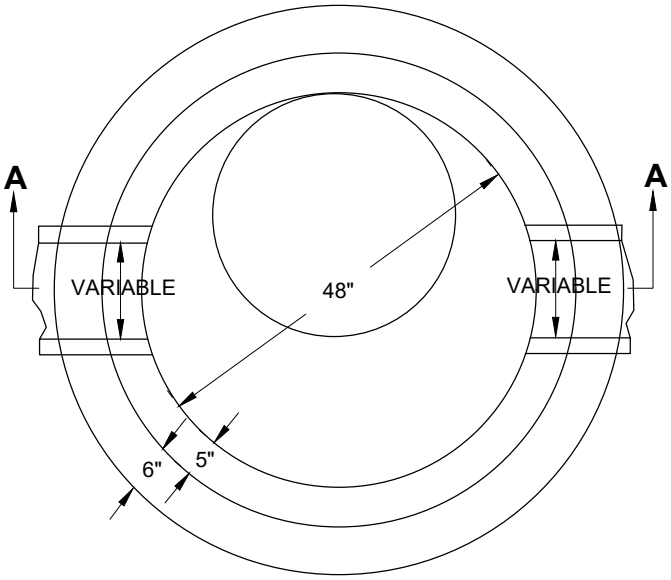

SECTION B-B

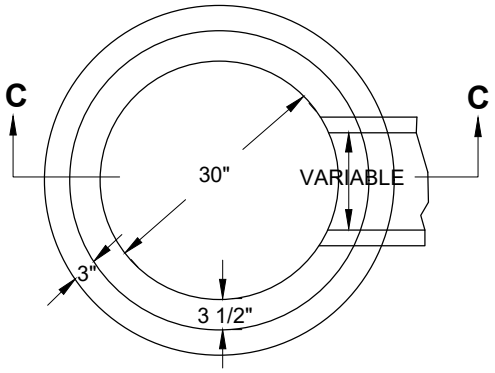

SECTION D-D

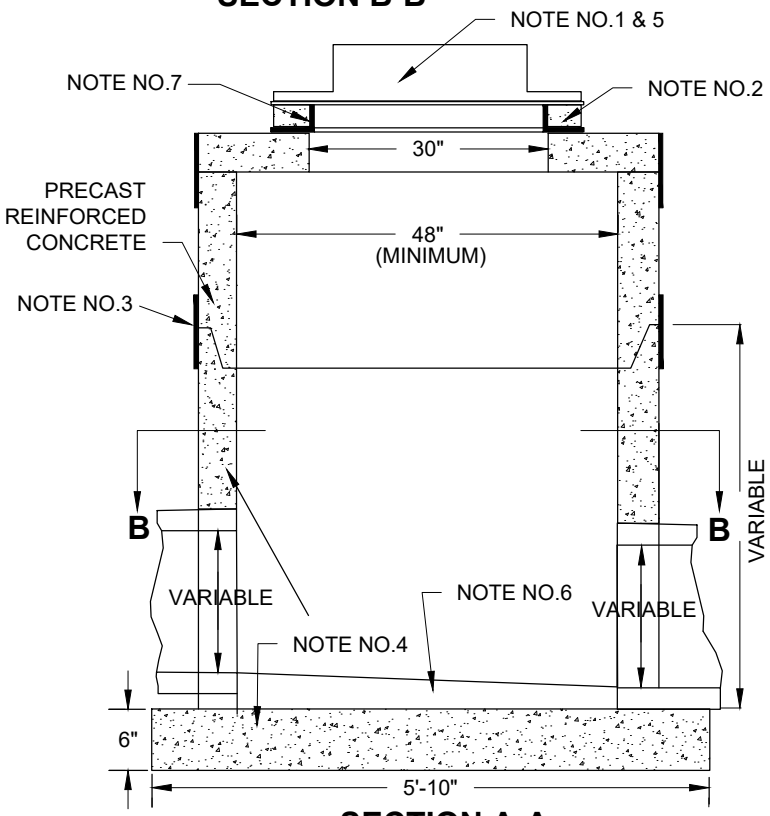

SECTION A-A
TYPE 24" INLET/MANHOLE

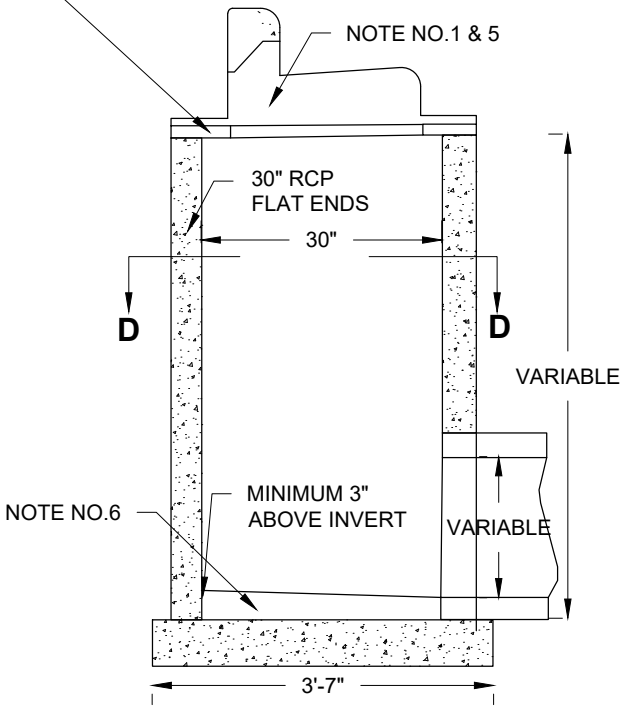

SECTION C-C
TYPE 24" INLET

Bismarck Engineering Department	TYPE 24" INLET/MANHOLE & TYPE 24" INLET	SCALE: Not to Scale DATE: 3/2019	STANDARD DETAIL NO. 1205-5

NOTE NO.1 - TYPE 36" INLET CASTING SHALL BE AS DEFINED IN SECTION 1205.
TYPE 72" INLET CASTING SHALL BE AS DEFINED IN SECTION 1205.

NOTE NO.2 - ALLOWANCE FOR ADJUSTMENT SHALL BE 1 1/2" MINIMUM TO 3" MAXIMUM. SEE STANDARD DETAIL NO.1206-1.

NOTE NO.3 - WHEN THE O.D. OF THE PIPE EXCEEDS THE DIMENSIONS SHOWN FOR TYPE 'B' OR TYPE 'C' INLETS, THE INLET WALLS SHALL BE POURED FLUSH WITH THE OUTSIDE WALLS OF THE PIPE. THE ROOF SLAB SHALL BE CONSTRUCTED AS DETAILED IN SECTION C-C BELOW.

NOTE NO.4 - ALL BARS SHALL BE NO.5 DEFORMED REINFORCING BARS SPACED 6" CENTER TO CENTER BOTH WAYS.

NOTE NO.5 - BOLTS FOR CASTING SHALL BE TEMPER FINISH,DOUBLE HEAT TREATED-1038 S.A.E. GRADE 5, WITH CAD-DICHROMATE PLATING.

NOTE NO.6 - STEPS SHALL NOT BE PLACED IN SANITARY SEWER, STORM SEWER OR AIR RELEASE MANHOLES OR INLETS UNLESS SPECIFIED. IF SPECIFIED, THE MANHOLE STEPS SHALL BE DELTA SUREFOOT OR APPROVED EQUAL. STEPS SHALL BE SPACED 16" ON CENTER.

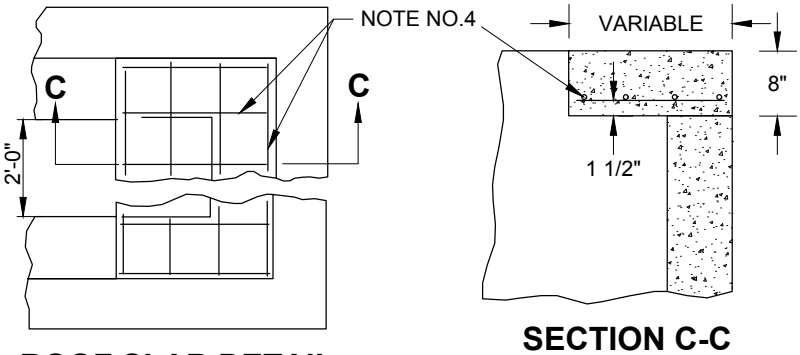

ROOF SLAB DETAIL

SECTION C-C

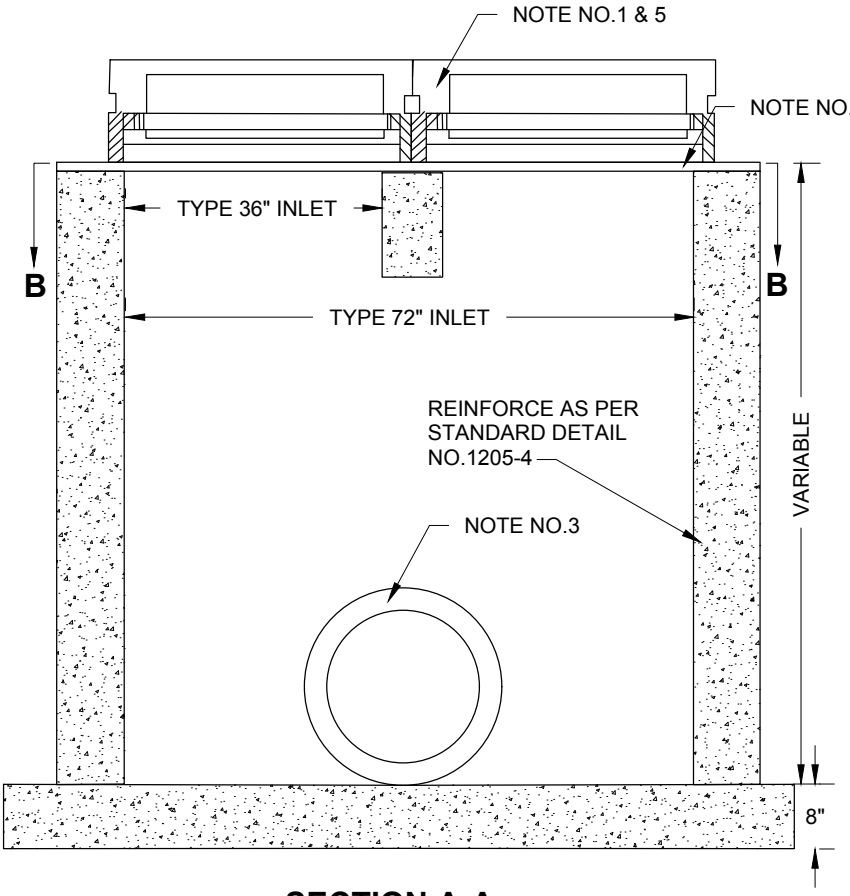

SECTION A-A

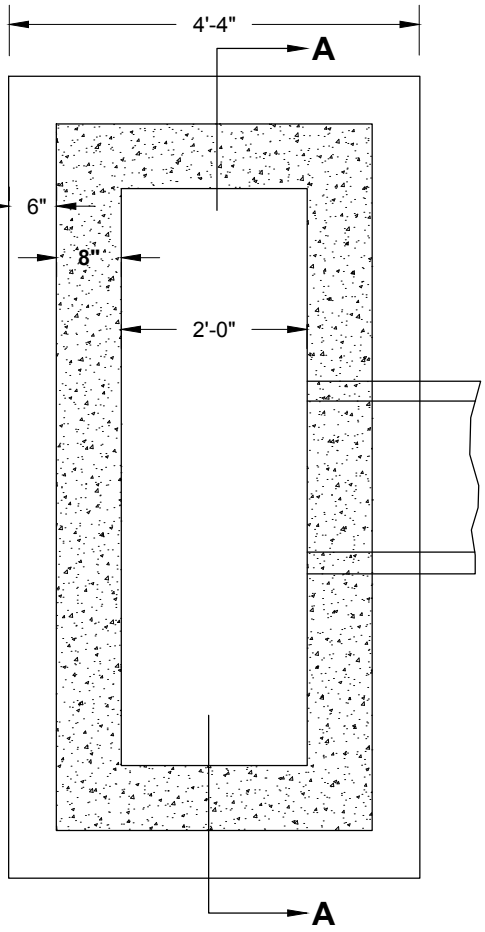

SECTION B-B

Bismarck Engineering Department	TYPE 36" AND TYPE 72" INLETS (SHEET 1 OF 2)	SCALE: Not to Scale DATE: 3/2017	STANDARD DETAIL NO. 1205-6

NOTE NO.1 - TYPE 36" INLET CASTING SHALL BE AS DEFINED IN SECTION 1205.
TYPE 72" INLET CASTING SHALL BE AS DEFINED IN SECTION 1205.

NOTE NO.2 - ALLOWANCE FOR ADJUSTMENT SHALL BE 1 1/2" MINIMUM TO 3" MAXIMUM. SEE STANDARD DETAIL NO.1206-1.

NOTE NO.3 - REINFORCED CONCRETE ROOF SLAB MAY BE PRECAST OR CAST IN PLACE.

NOTE NO.4 - ALL BARS SHALL BE NO.5 DEFORMED REINFORCING BARS SPACED 6" CENTER TO CENTER BOTH WAYS.

NOTE NO.5 - BOLTS FOR CASTING SHALL BE TEMPER FINISH,DOUBLE HEAT TREATED-1038 S.A.E. GRADE 5, WITH CAD-DICHROMATE PLATING.

NOTE NO.6 - STEPS SHALL NOT BE PLACED IN SANITARY SEWER, STORM SEWER OR AIR RELEASE MANHOLES OR INLETS UNLESS SPECIFIED. IF SPECIFIED, THE MANHOLE STEPS SHALL BE DELTA SUREFOOT OR APPROVED EQUAL. STEPS SHALL BE SPACED 16" ON CENTER.

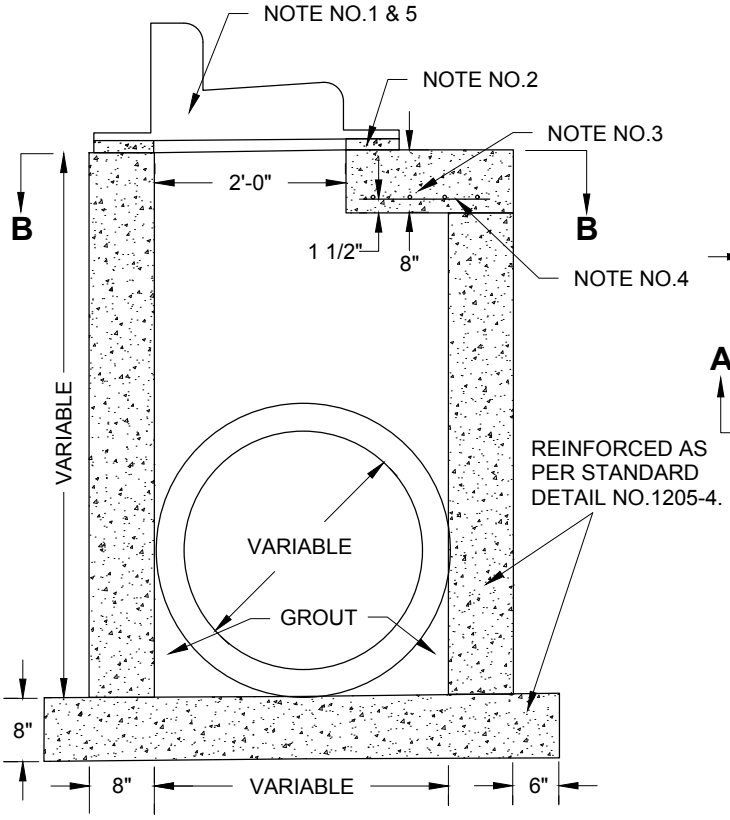

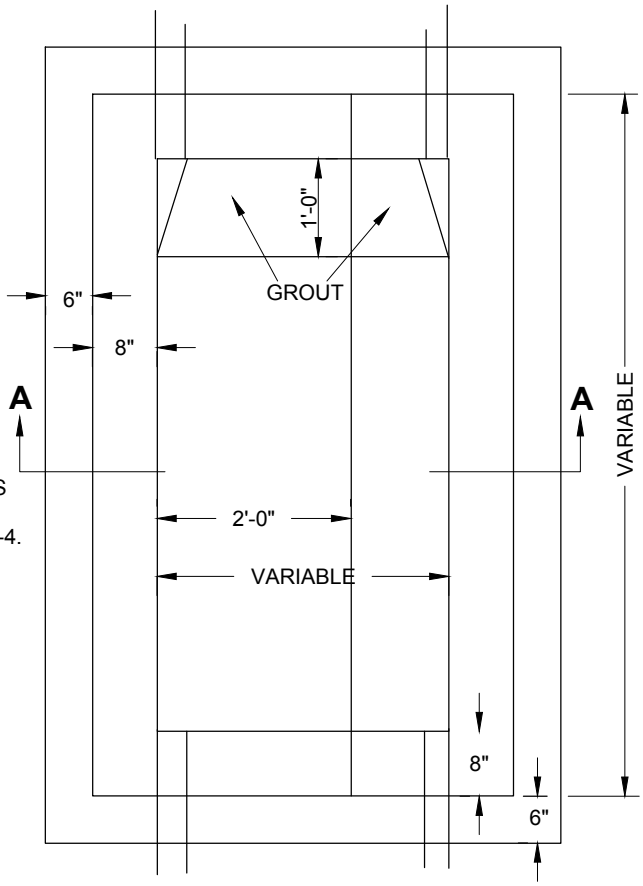

Bismarck Engineering Department	TYPE 36" AND TYPE 72" INLET (SHEET 2 OF 2)	SCALE: Not to Scale DATE: 3/2017	STANDARD DETAIL NO. 1205-7

NOTE NO.1 - INLET CASTING SHALL BE AS DEFINED IN SECTION 1205.

NOTE NO.2 - ALLOWANCE FOR ADJUSTMENT SHALL BE 1 1/2" MINIMUM TO 3" MAXIMUM. SEE STANDARD DETAIL NO.1206-1.

NOTE NO.3 - ALL BARS SHALL BE NO.5 DEFORMED REINFORCING BARS. AT LEAST TWO BARS SHALL BE PLACED 3" CENTER TO CENTER AROUND THE INLET OPENING. ALL OTHER BARS SHALL BE SPACED 6" CENTER TO CENTER BOTH WAYS.

NOTE NO.4 - REINFORCED CONCRETE ROOF SLAB MAY BE PRECAST OR CAST IN PLACE.

NOTE NO.5 - BOLTS FOR CASTING SHALL BE TEMPER FINISH,DOUBLE HEAT TREATED-1038 S.A.E. GRADE 5, WITH CAD-DICHROMATE PLATING.

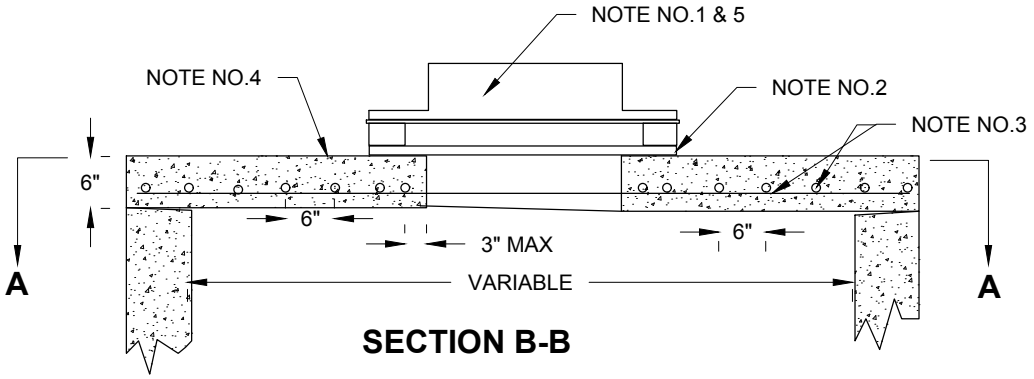

SECTION B-B

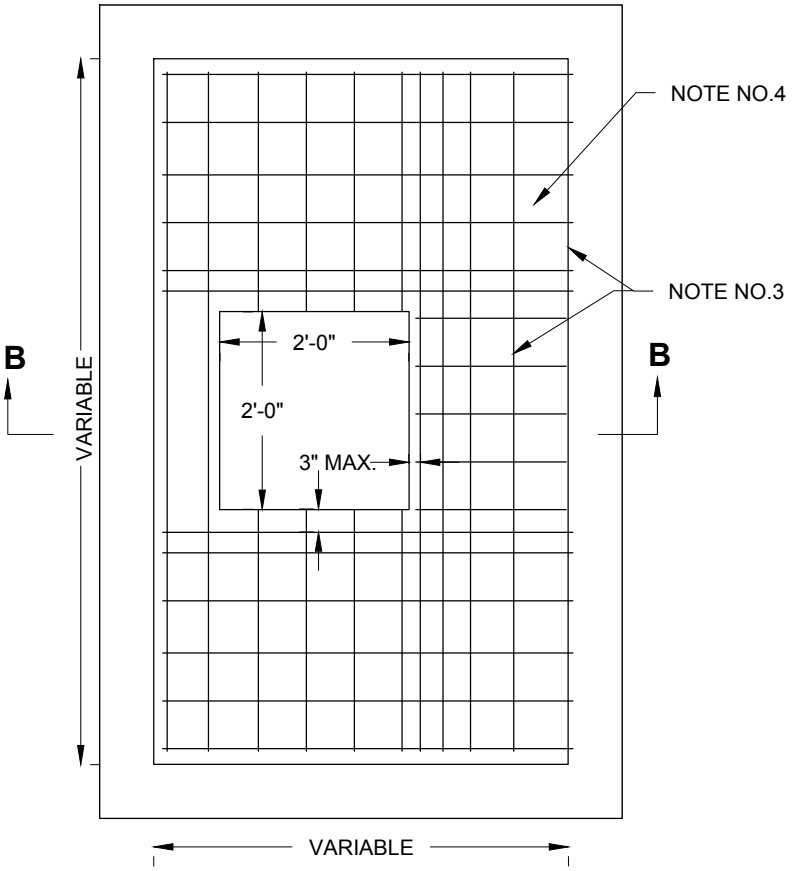

SECTION A-A

Bismarck Engineering Department	**ROOF SLAB FOR TYPE 36" & 72" INLET W/ TYPE 24" CASTING**	SCALE: Not to Scale DATE: 3/2017	STANDARD DETAIL NO. **1205-8**

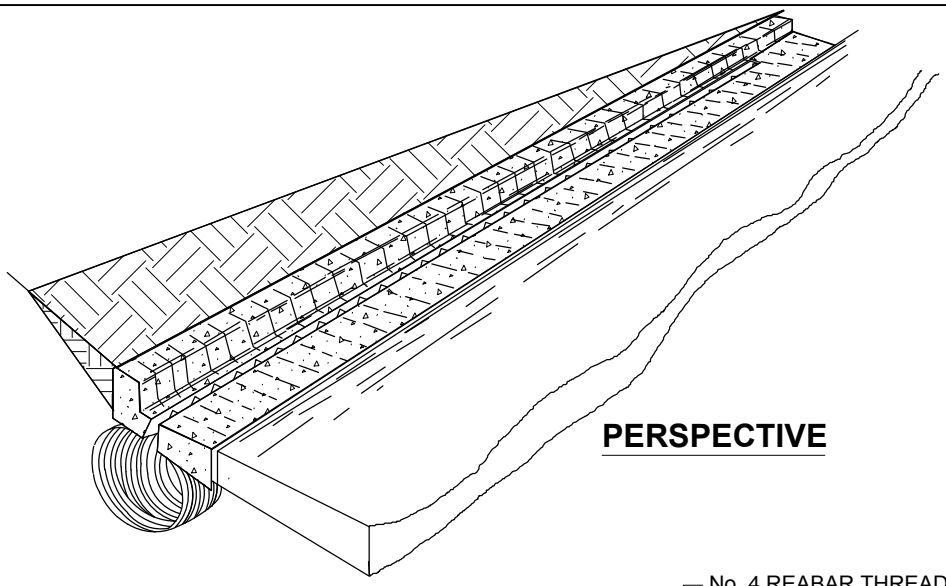

PERSPECTIVE

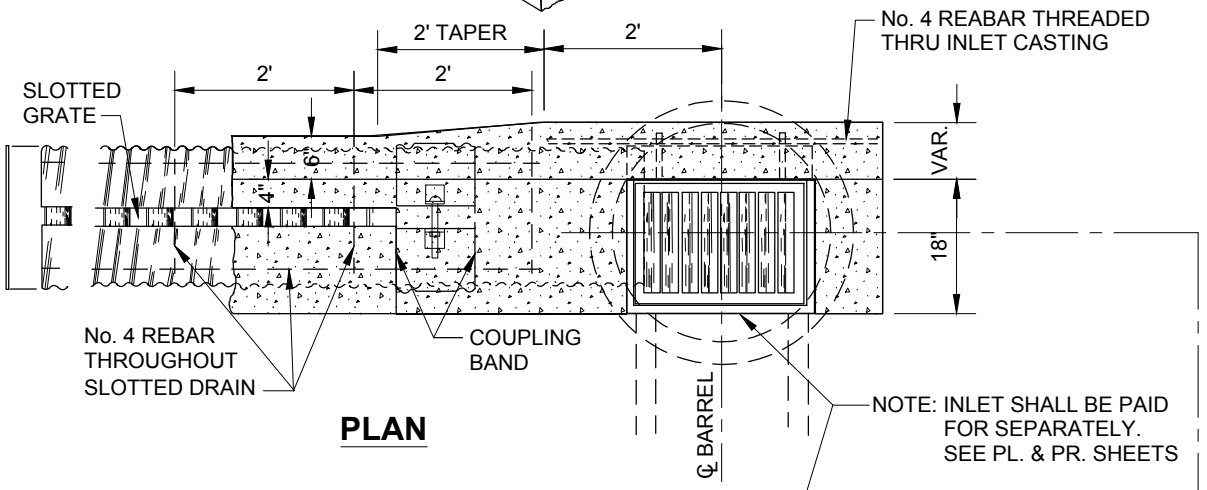

PLAN

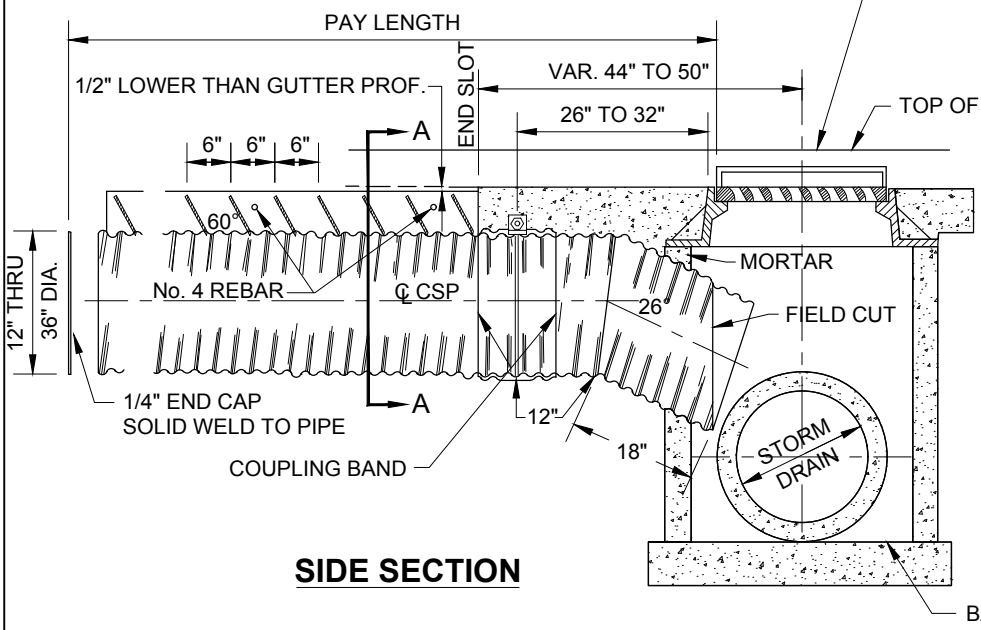

SIDE SECTION

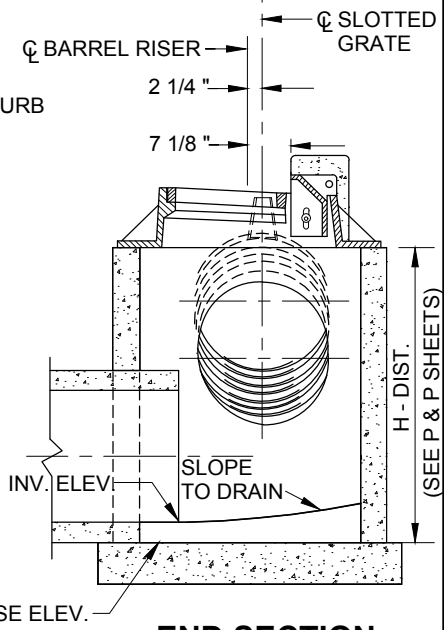

END SECTION

Bismarck Engineering Department	**SLOTTED DRAIN INLET - (SHEET 1 OF 2)**	SCALE: Not to Scale DATE: 3/2017	STANDARD DETAIL NO. **1205-9**

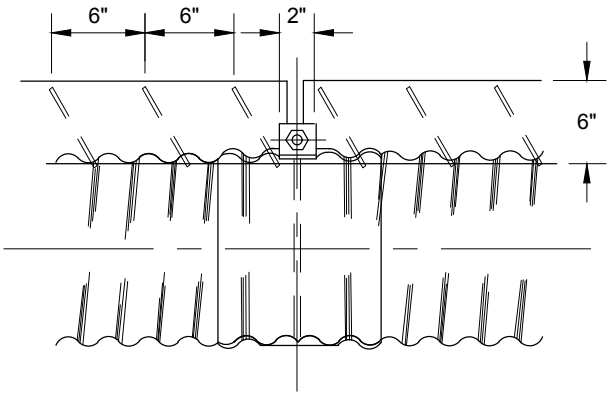

SIDE VIEW

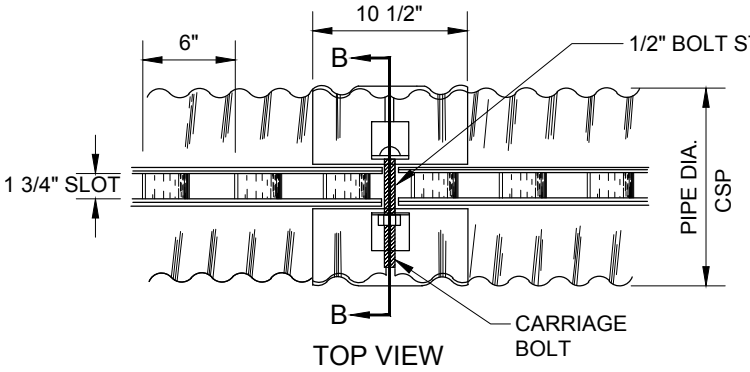

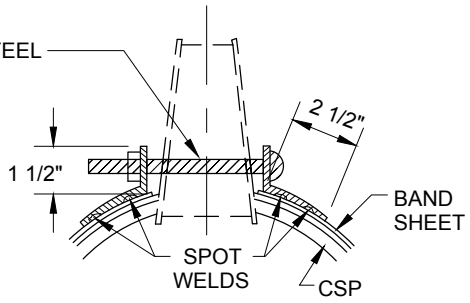

SECTION B-B

TYPICAL COUPLING BAND

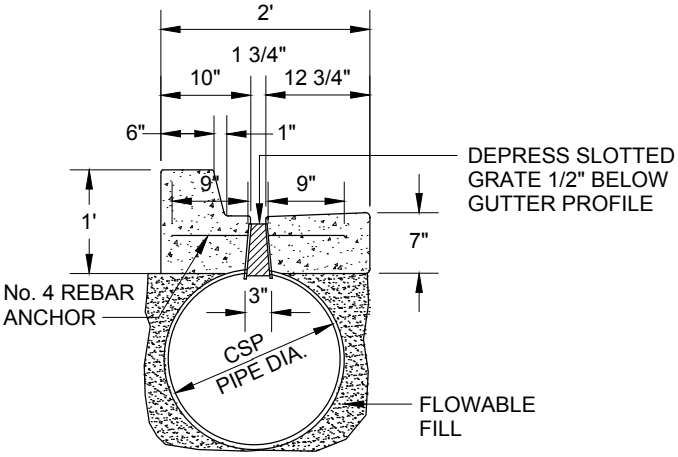

SECTION A-A

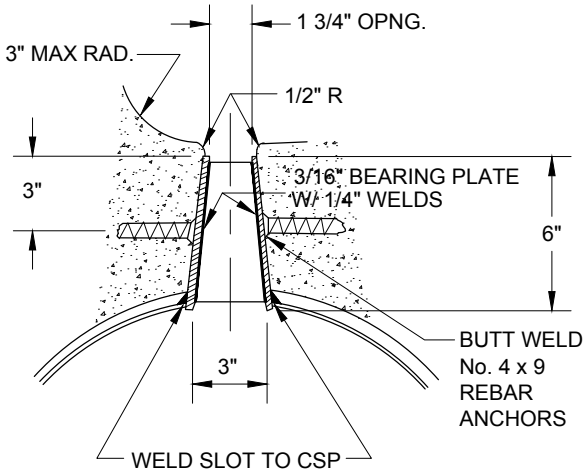

TYPICAL SECTION

Bismarck Engineering Department	**SLOTTED DRAIN INLET - (SHEET 2 OF 2)**	SCALE: Not to Scale DATE: 3/2017	STANDARD DETAIL NO. **1205-10**

NOTE NO.1 - MANHOLE CASTING AND COVER SHALL BE AS DEFINED IN SECTION 1205.

NOTE NO.2 - 48" TYPE II COVER IN SECTION 1205.

NOTE NO.3 - MANHOLE CASTING ADJUSTMENT - SEE STANDARD DETAIL NO. 1206-1.

NOTE NO.4 - 2" STYROFOAM INSULATION SHALL BE AS DEFINED IN SECTION 901 INSTALLED AROUND THE OUTSIDE OF THE TOP 4 FEET OF THE MANHOLE AND HELD IN PLACE BY BANDS OR GLUE UNTIL BACKFILLED.

NOTE NO.5 - P2 GASKETED JOINT FOR 48" MANHOLES, CX-4 JOINT FOR ALL OTHER SIZES OF MANHOLES AND EXTERIOR SEAL BY PRESS-SEAL GASKET CORP. EZ WRAP AND EZ STIK NO. 4 PRIMER, SPECIALTY PRODUCTS "MAC WRAP", INFI-SHIELD EXTERNAL GATOR WRAP, OR AN APPROVED EQUAL.

NOTE NO.6 - INSTALL 2" STYROFOAM INSULATION AS DEFINED IN SECTION 901 GLUED TO THE BOTTOM OF THE PRECAST COVER.

NOTE NO.7 - SHALL BE PSX PRESS BOOT SECTION 1205.

NOTE NO.8 - 1" AUTOMATIC AIR RELEASE VALVE - SEE SECTION 1205-2.9

NOTE NO.9 - SEAL WITH EZ STIK PREMIUM BUTYL JOINT SEALANT OR AN APPROVED EQUAL.

NOTE NO.10 - SEE SECTION 1205 FOR PRECAST MANHOLE BASE REINFORCEMENT.

NOTE NO.11 - I/I BARRIER WITH CAP 'N SEAL AS MANUFACTURED BY AP/M PERMAFORM OR AN APPROVED EQUAL. ADJUSTMENT RINGS SHALL NOT EXCEED THE HEIGHT OF THE I/I BARRIER.

NOTE NO.12 - STEPS SHALL NOT BE PLACED IN SANITARY SEWER, STORM SEWER OR AIR RELEASE MANHOLES OR INLETS UNLESS SPECIFIED. IF SPECIFIED, THE MANHOLE STEPS SHALL BE DELTA SUREFOOT OR APPROVED EQUAL. STEPS SHALL BE SPACED 16" ON CENTER.

NOTE NO.13 - PROVIDE 6" CAST ALUMINUM EXPANSION PLUG.

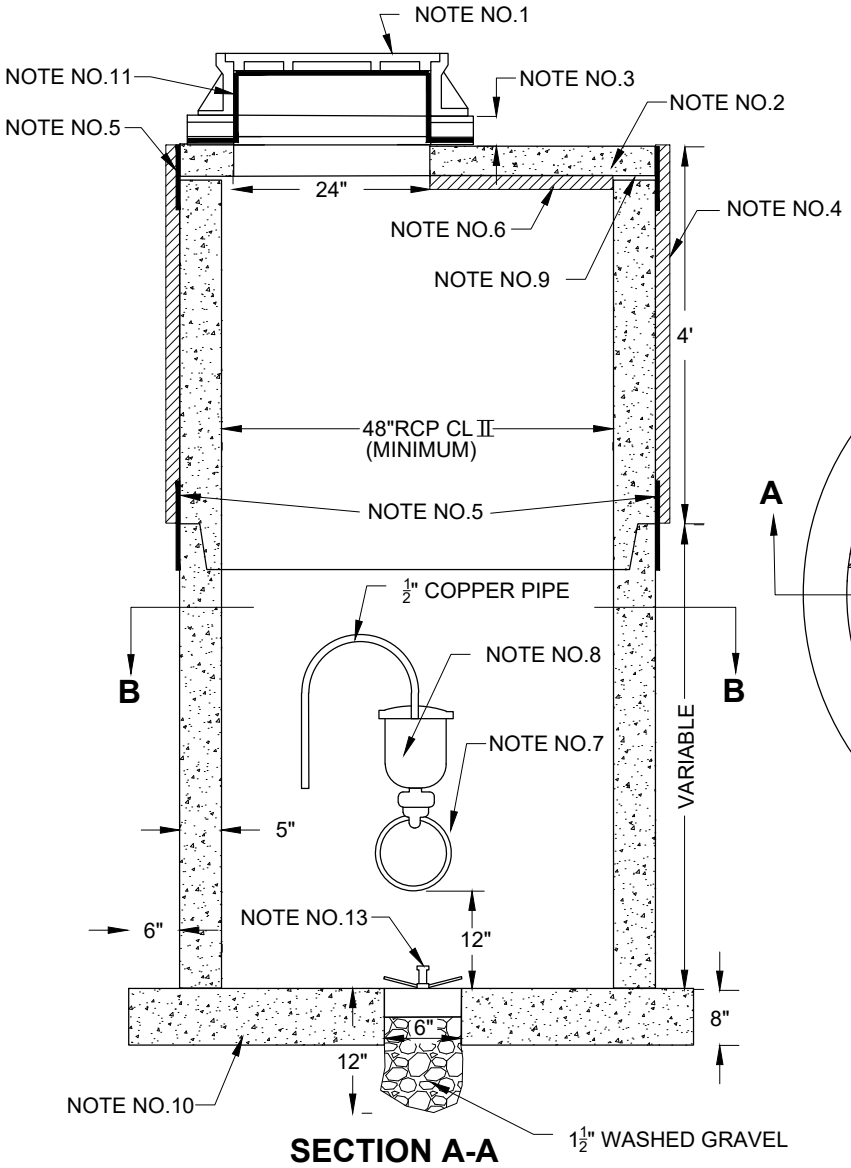

SECTION A-A

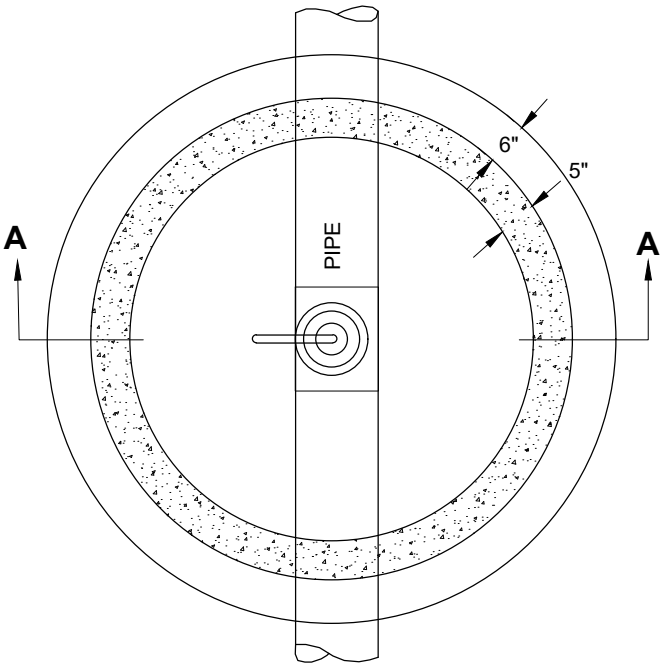

SECTION B-B

Bismarck Engineering Department	AIR RELEASE MANHOLE	SCALE: Not to Scale DATE: 3/2019	STANDARD DETAIL NO. 1205-11

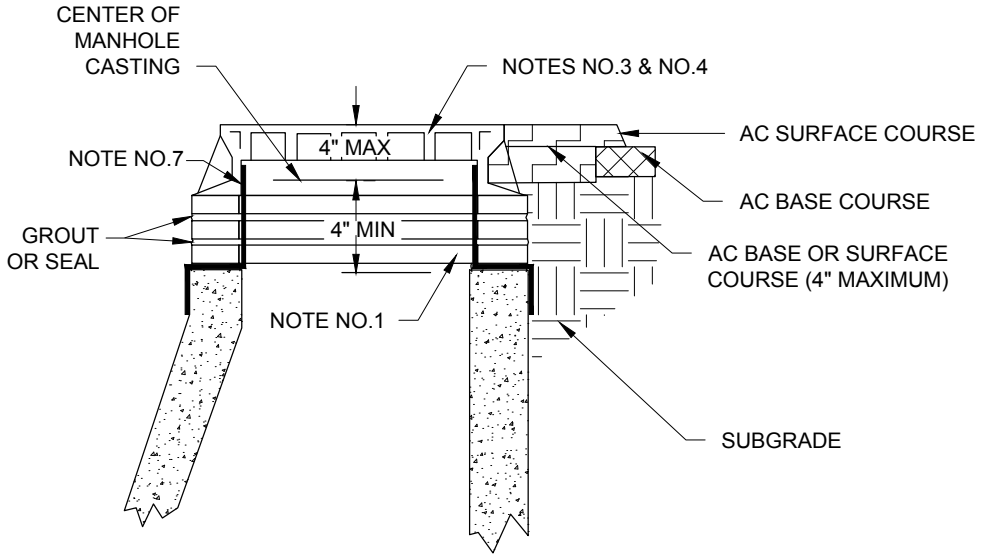

MANHOLE CASTING STANDARD ADJUSTMENT

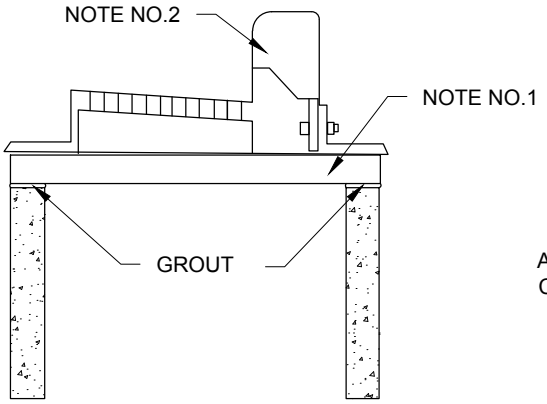

INLET STANDARD ADJUSTMENT

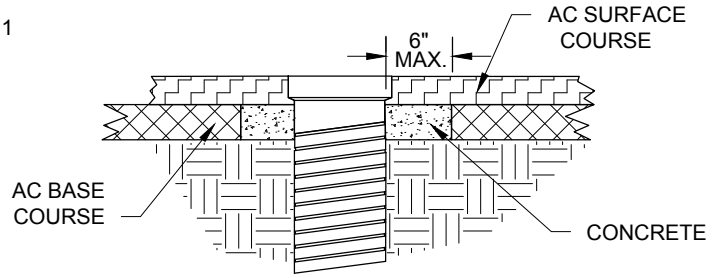

VALVE BOX ADJUSTMENT

NOTE NO.1 - USE PRECAST CONCRETE ADJUSTING RINGS FOR ADJUSTMENT OF MANHOLES AND TYPE 24" INLET AND TYPE 24" INLET/ MANHOLE. USE CONCRETE BLOCKS FOR ADJUSTMENT OF TYPE 36" AND TYPE 72" INLETS. GROUT SHALL BE PLACED BETWEEN ALL SURFACES. GROUT ON THE INSIDE EDGE OF ADJUSTING RINGS SHALL HAVE A SMOOTH FINISH.

NOTE NO.2 - INLET BACK SHALL BE ADJUSTED TO CONFORM WITH CURB & GUTTER GRADES AND CURB ALIGNMENT.

NOTE NO.3 - MANHOLE CASTING SHALL BE ADJUSTED TO CONFORM WITH SLOPE AND GRADE OF PROPOSED CONCRETE OR PAVEMENT.

NOTE NO.4 - MANHOLE CASTING SHALL BE ADJUSTED AFTER THE AC LEVELING COURSE OR THE AC BASE COURSE HAS BEEN PLACED.

NOTE NO.5 - INLET AND MANHOLE CASTINGS SHALL BE CONSIDERED ADJUSTED ONLY WHEN RAISED OR LOWERED BY ADDING OR REMOVING ADJUSTING RINGS OR GROUT.

NOTE NO.6 - ADAPTOR RING SHALL BE AMERICAN HIGHWAY PRODUCTS MANHOLE RISER OR AN APPROVED EQUAL.

NOTE NO.7 - I/I BARRIER AS MANUFACTURED BY AP/M PERMAFORM OR AN APPROVED EQUAL, IF SPECIFIED. ADJUSTMENT RINGS SHALL NOT EXCEED THE HEIGHT OF THE I/I BARRIER.

Bismarck Engineering Department	**MANHOLE , INLET & VALVE BOX ADJUSTMENT IN ASPHALT**	SCALE: Not to Scale DATE: 3/2017	STANDARD DETAIL NO. **1206-1**

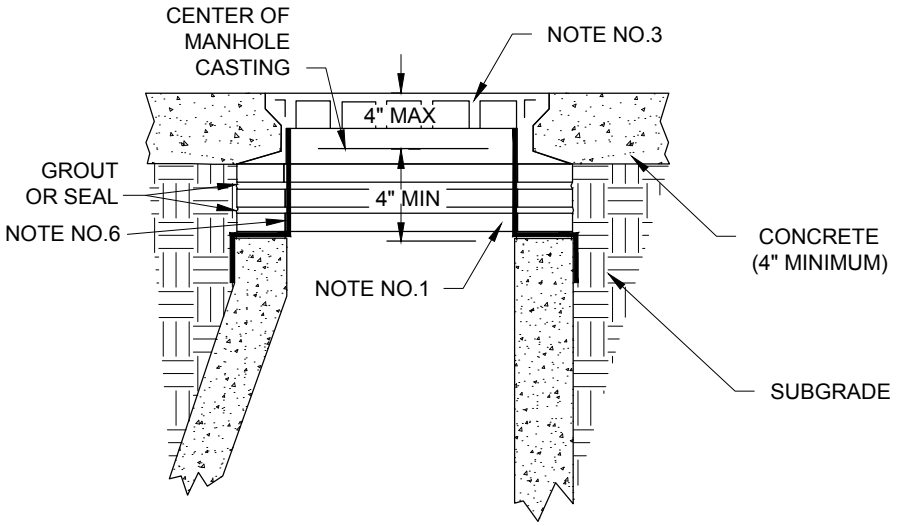

MANHOLE CASTING STANDARD ADJUSTMENT

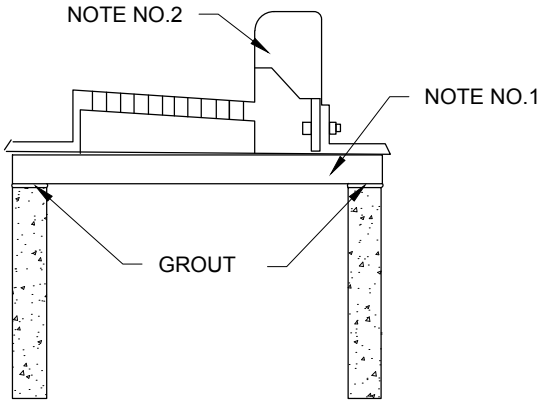

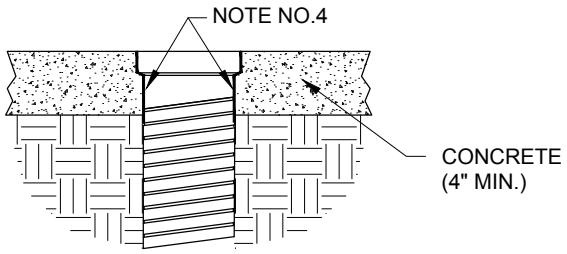

VALVE BOX ADJUSTMENT

INLET STANDARD ADJUSTMENT

NOTE NO.1 - USE PRECAST CONCRETE ADJUSTING RINGS FOR ADJUSTMENT OF MANHOLES AND TYPE 24" INLET AND TYPE 24" INLET/ MANHOLE. USE CONCRETE BLOCKS FOR ADJUSTMENT OF TYPE 36" AND TYPE 72" INLETS. GROUT SHALL BE PLACED BETWEEN ALL SURFACES. GROUT ON THE INSIDE EDGE OF ADJUSTING RINGS SHALL HAVE A SMOOTH FINISH.

NOTE NO.2 - INLET BACK SHALL BE ADJUSTED TO CONFORM WITH CURB & GUTTER GRADES AND CURB ALIGNMENT.

NOTE NO.3 - MANHOLE CASTING SHALL BE ADJUSTED TO CONFORM WITH SLOPE AND GRADE OF PROPOSED CONCRETE OR PAVEMENT.

NOTE NO.4 - VALVES AND CURB STOP BOXES MUST BE WRAPPED IN ACCORDANCE WITH SECTION 1206.

NOTE NO.5 - INLET AND MANHOLE CASTINGS SHALL BE CONSIDERED ADJUSTED ONLY WHEN RAISED OR LOWERED BY ADDING OR REMOVING ADJUSTING RINGS OR GROUT.

NOTE NO.6 - I/I BARRIER AS MANUFACTURED BY AP/M PERMAFORM OR AN APPROVED EQUAL. ADJUSTMENT RINGS SHALL NOT EXCEED THE HEIGHT OF THE I/I BARRIER.

Bismarck Engineering Department	**MANHOLE , INLET & VALVE BOX ADJUSTMENT IN CONCRETE**	SCALE: Not to Scale DATE: 3/2017	STANDARD DETAIL NO. **1206-2**

NOTES: BED FRAME IN MORTAR, INSTALL PRECAST TWO-INCH RINGS, AND PLASTER INSIDE AND OUT WITH MORTAR.

INSTALLED COST AT EXISTING LOCATIONS SHALL BE INCLUDED IN PRICE BID FOR "ADJUST FLOATING MANHOLE CASTING", OR "FURNISH & ADJUST FLOATING MANHOLE CASTING".

INSTALLATION COST AT NEW MANHOLE LOCATIONS SHALL BE INCLUDED IN THE PRICE BID FOR "MANHOLES".

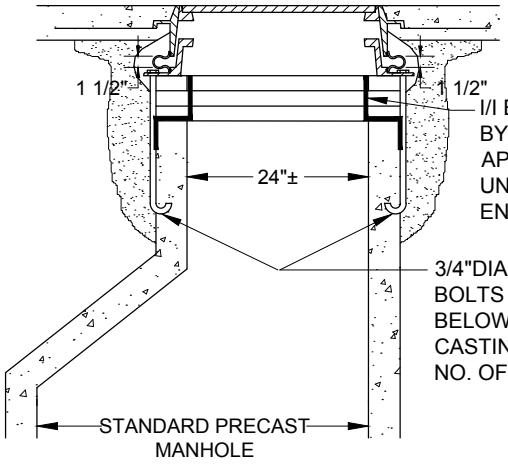

I/I BARRIER AS MANUFACTURED BY AP/M PERMAFORM, OR AN APPROVED EQUAL REQUIRED, UNLESS DIRECTED BY ENGINEER.

3/4"DIA. STAINLESS STEEL ANCHOR BOLTS WITH NUT, TO EXTEND 5" BELOW ADJUSTING RINGS, 4 PER CASTING. LENGTH MAY VARY WITH NO. OF ADJUSTING RINGS.

CROSS SECTION OF CONNECTION TO CONICAL MANHOLE - TYPICAL

FRAMES WHEN COMPRESSED ARE 11 1/2" IN HEIGHT. SET UPPER FRAME 1 1/2" ABOVE LOWER FRAME.

WHEN INSTALLING A BOX OUT INTO EXISTING PAVEMENT, DRILL 20" LONG NO.5 REBAR 6" DEEP - 15" O.C. SEE STD. DETAIL 1206-4

NEENAH R-1955-1 FLOATING M.H. CASTING OR EQUAL

REFER TO NEENAH NO. R-1733-0067, R-1733-0078, R-1733-0716 OR EQUAL AS APPROPRIATE FOR USE.

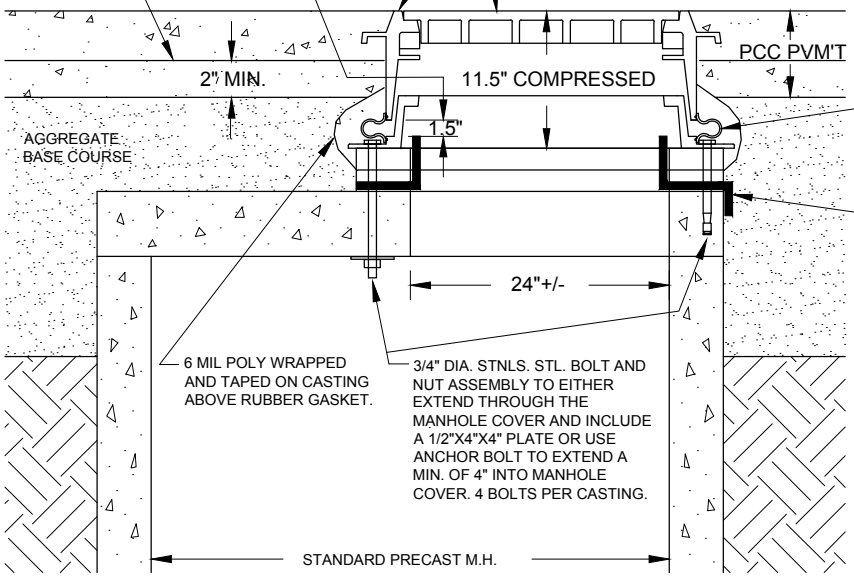

3/16"x5" EXTRUDED NEOPRENE GASKET SECURED TO CLAMPS

I/I BARRIER AS MANUFACTURED BY AP/M PERMAFORM, OR AN APPROVED EQUAL REQUIRED, UNLESS DIRECTED BY ENGINEER.

6 MIL POLY WRAPPED AND TAPED ON CASTING ABOVE RUBBER GASKET.

3/4" DIA. STNLS. STL. BOLT AND NUT ASSEMBLY TO EITHER EXTEND THROUGH THE MANHOLE COVER AND INCLUDE A 1/2"X4"X4" PLATE OR USE ANCHOR BOLT TO EXTEND A MIN. OF 4" INTO MANHOLE COVER. 4 BOLTS PER CASTING.

CROSS SECTION

Bismarck Engineering Department	FLOATING MANHOLE CASTING DETAIL (SHEET 1 OF 2)	SCALE: Not to Scale DATE: 3/2017	STANDARD DETAIL NO. 1206-3

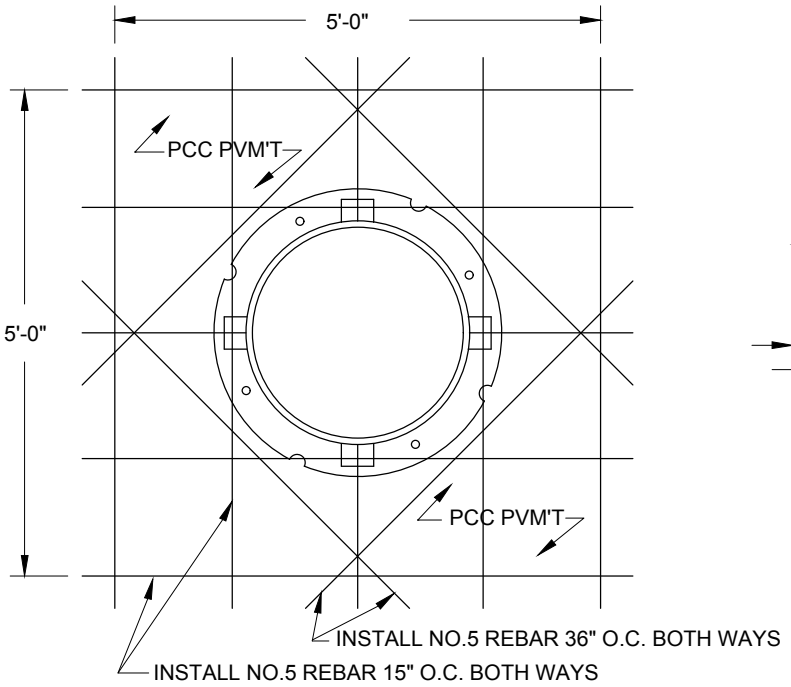

PLAN VIEW

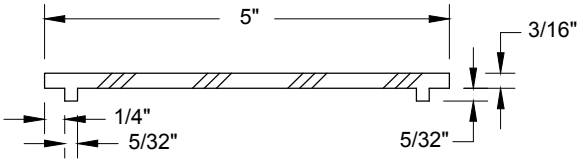

SECTION OF EXTRUDED NEOPRENE GASKET

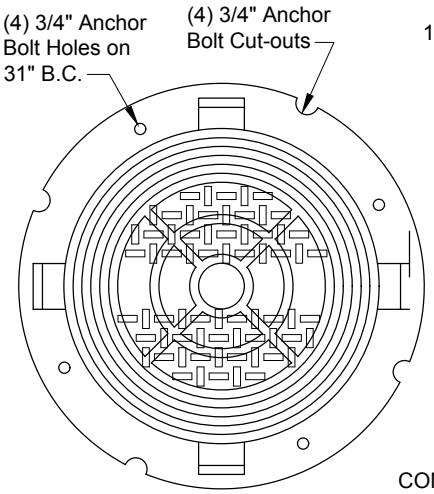

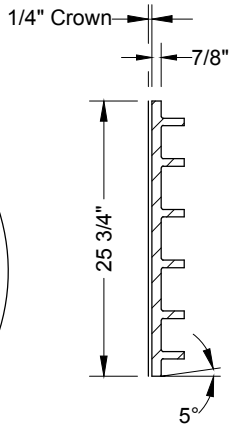

COMP. #'S LID 1733-078 207 Lbs
or LID 1733-0716 109 Lbs

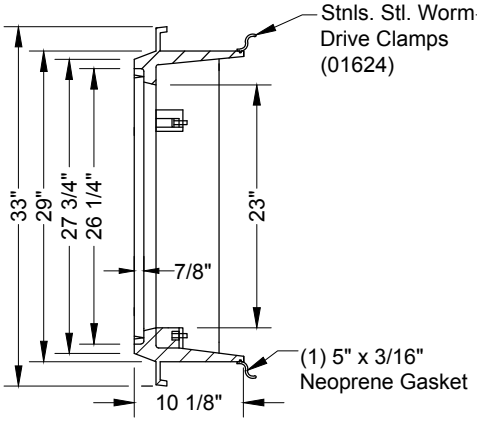

FR. 1955-0004
272 Lbs

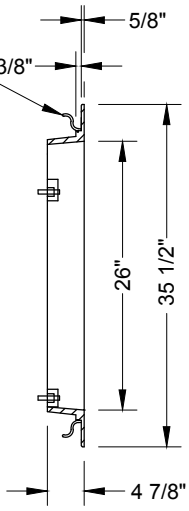

FR. 1955-0003
160 Lbs

MATERIAL: Cast Gray Iron ASTM A-48, Class 358
FINISH: Black Asphalt Emulsion WEIGHT:
639#/Unit

Bismarck Engineering Department	**FLOATING MANHOLE CASTING DETAIL (SHEET 2 OF 2)**	SCALE: Not to Scale DATE: 3/2017	STANDARD DETAIL NO. **1206-4**

FABRIC TIES ON ALL POSTS 12" C to C

FABRIC TIES ON TOP RAIL 24" C to C

FENCE LINES OF 1000' OR MORE SHALL BE BRACED & TRUSSED IN BOTH DIRECTIONS @ THE MIDPOINT OF THE LINE.

GATE LATCH - SPRING OR PIG-EAR TYPE LATCH AS RECOMMENDED BY THE MANUFACTURER.

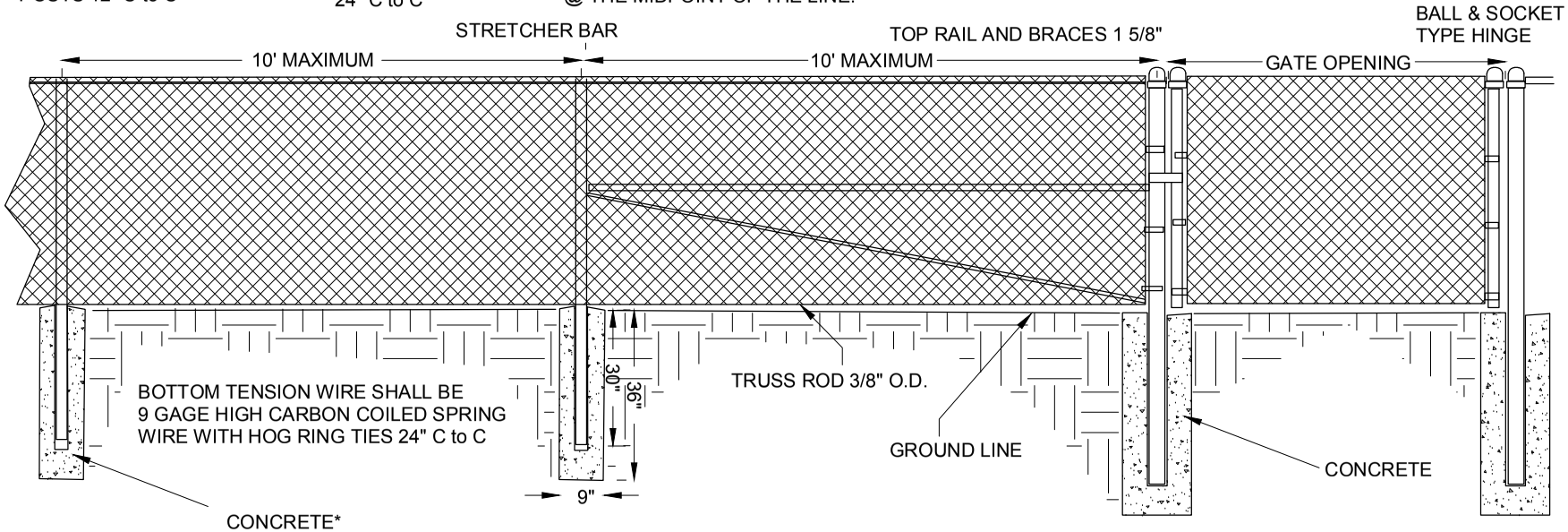

*OPTIONAL DIRECT DRIVER POSTS, SEE SPECIFICATION 1208-3.3

SINGLE GATE & FENCE DETAIL

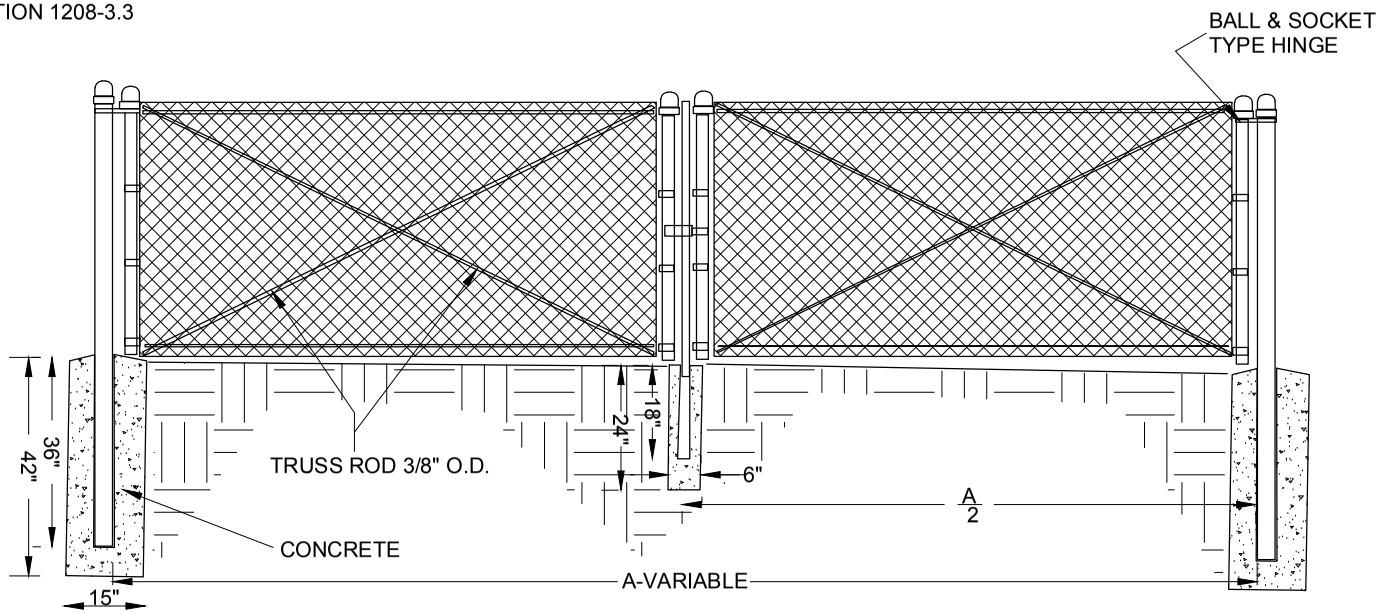

DOUBLE GATE DETAIL

Bismarck Engineering Department

CHAIN LINK FENCE AND GATES

SCALE: Not to Scale

DATE: 3/2017

STANDARD DETAIL NO. 1208-1

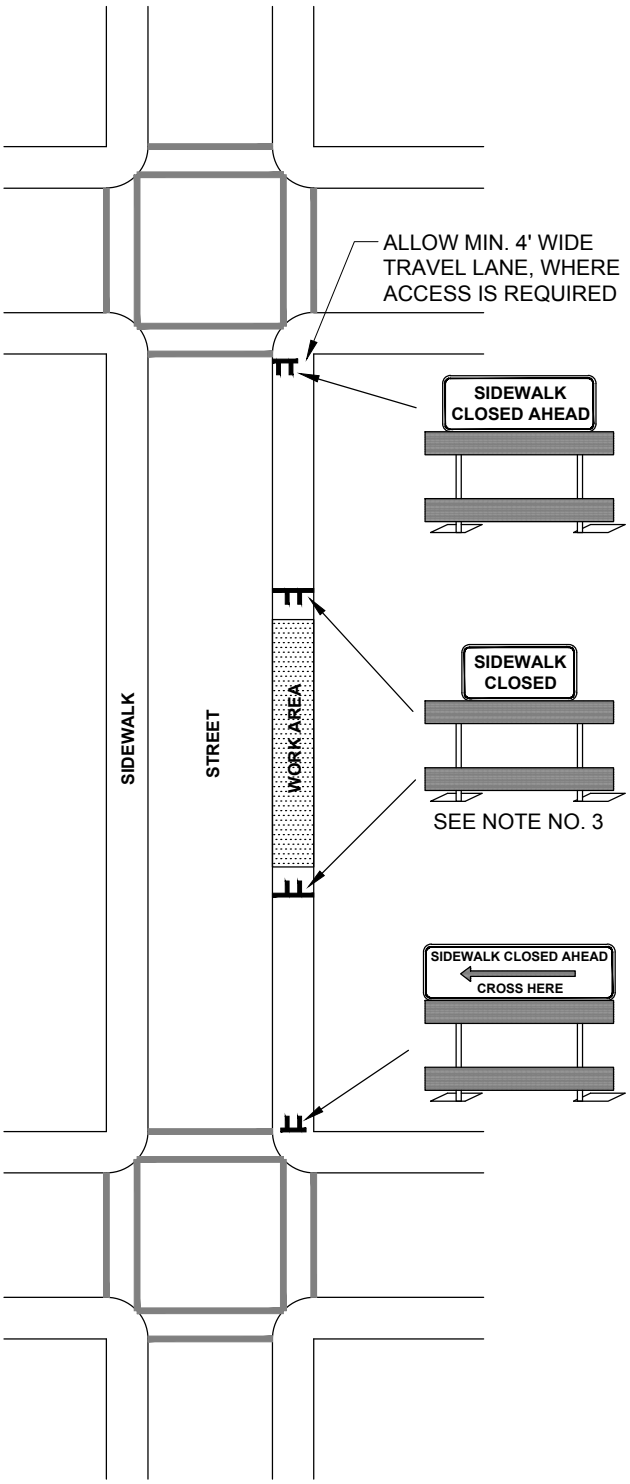

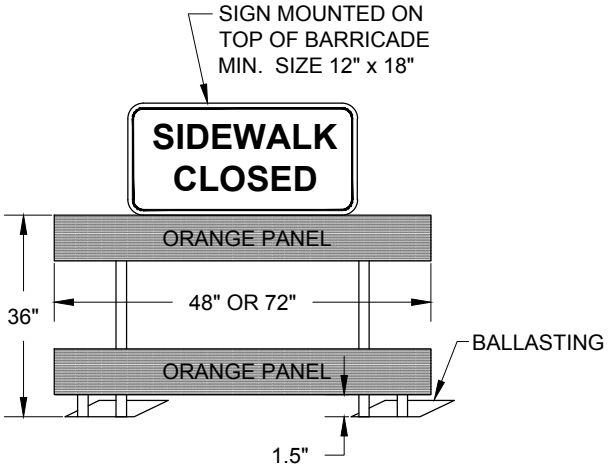

NOTE NO. 1 BARRICADES SHALL BE ORANGE AND ARE NOT REQUIRED TO BE REFLECTORIZED.

NOTE NO. 2 ALL BALLASTING SHALL BE DONE BEHIND THE BARRICADE.

NOTE NO. 3 BARRICADE WIDTH SHALL BE SUFFICIENT TO COVER THE WIDTH OF THE SIDEWALK.

NOTE NO. 4 MINIMUM OF 2 BARRICADES SHALL BE USED AT ALL SIDEWALK CLOSURES.

Bismarck Engineering Department	**WORK ZONE ADA COMPLIANT TEMPORARY PEDESTRIAN BARRICADES**	SCALE: Not to Scale DATE: 3/2017	STANDARD DETAIL NO. **1211-1**

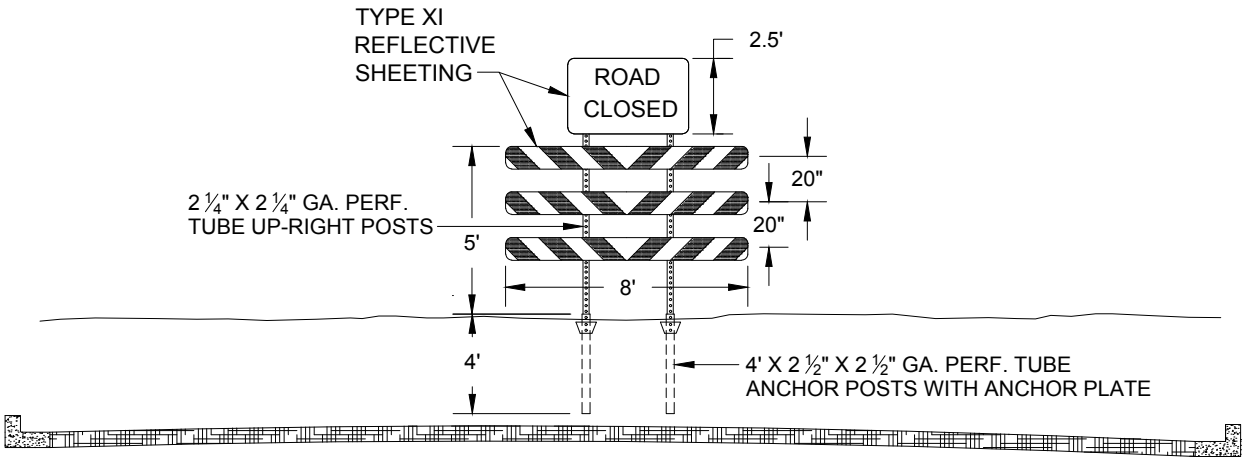

DETAIL B-1 SINGLE BARRICADE

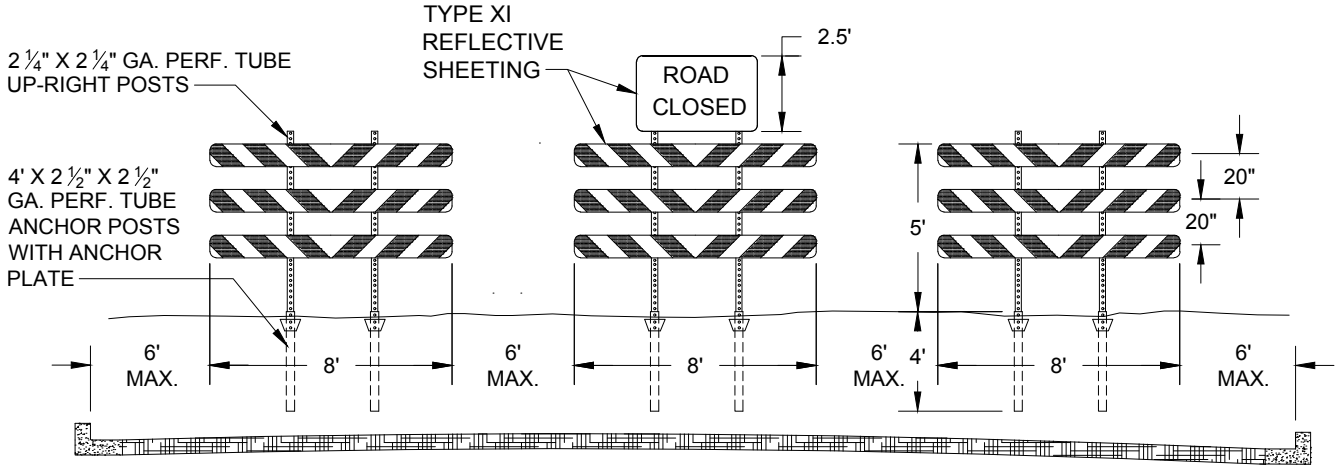

DETAIL B-3 TRIPLE BARRICADE

Bismarck Engineering Department	ROAD CLOSED TYPE III BARRICADES	SCALE: Not to Scale DATE: 3/2017	STANDARD DETAIL NO. 1212-1

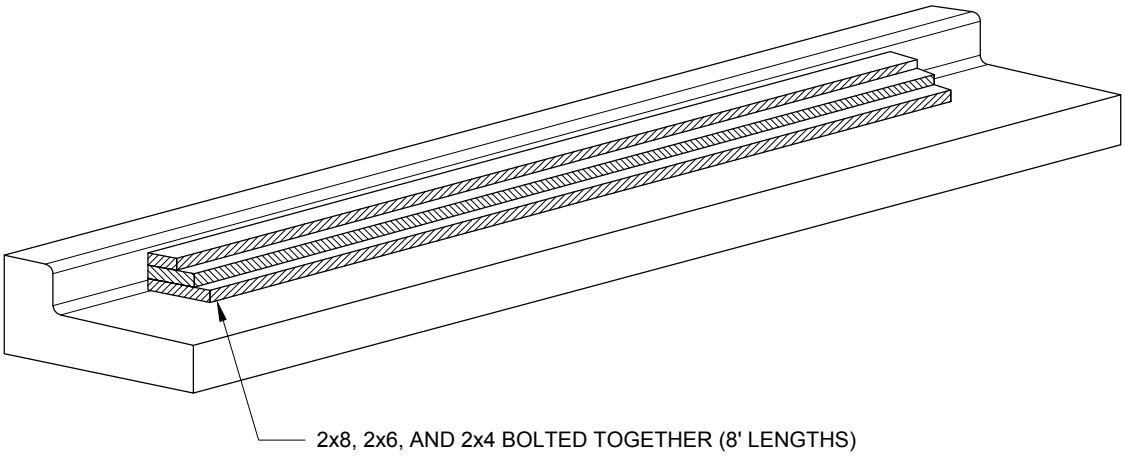

Bismarck Engineering Department	**TEMPORARY CURB MOUNT DETAIL**	SCALE: Not to Scale DATE: 3/2017	STANDARD DETAIL NO. **MISC.-1**

STANDARD FORMS

1401	Construction Contract
1402	Bid Bond
1403	Performance Bond
1404	Payment Bond
1405	Contract Progress Schedule
1406-1	Extra Work Order
1406-2	Extra Work Summary
1406-3	Extra Work - Labor
1406-4	Extra Work - Equipment
1406-5	Extra Work - Materials
1407	NDDOT Fuel Cost Adjustment Clause and Affidavit

North Dakota Income Tax Clearance or Account Number _____

Expiration Date of Certification _____

A G R E E M E N T

THIS AGREEMENT, made and entered into this « » day of « », 2011, by and between the City of Bismarck, a municipal corporation, hereinafter called the "CITY," and «company», with its office at «city», North Dakota, hereinafter called the "CONTRACTOR."

The parties hereto, in consideration of the mutual agreement contained, mutually undertake, promise, and agree for themselves, their respective representatives, successors, and assigns, as follows:

ARTICLE I

The Contractor shall furnish the materials and perform the work for «type of improvement», for the City of Bismarck, Burleigh County, North Dakota, in strict accord with the agreement as herein defined.

ARTICLE II

The following shall be deemed a part of this agreement:

1. The proposal for bids, instructions to bidders, and requirements for bidders;
2. The bid of the Contractor;
3. The Agreement;
4. The general provisions;
5. The specifications;
6. The contract drawings;
7. The bid bond, performance, and payment bonds and maintenance bond, if any;
8. Certificate of Insurance;
9. All addenda issued by the engineers prior to receipt of bids;
10. Notice of award;
11. Resolution of City awarding the bid;
12. All provisions required by law to be inserted in this contract whether actually inserted or not.

All of the above taken as a whole shall constitute the agreement documents.

ARTICLE III

The City agrees to pay the Contractor for the performance of this Agreement according to the schedule of approximate quantities, the aggregate of which is estimated to be

approximately $«amount». Payments are to be made as per specifications upon presentation of the proper certification of the Engineer or his representative and by the terms of this agreement. (Please see attachment.)

ARTICLE IV

All provisions of the contract relating to time of performance and completion of the work are of the essence of this contract. Accordingly the Contractor shall begin work on a date to be specified in a written order from the Board of City Commissioners and shall fully and entirely perform this contract, and all work incidental thereto; and all work completed no later than «date». All intermediate completion dates specified in the proposal shall also be adhered to.

ARTICLE V

During the performance of this contract, the Contractor agrees as follows:

(1) The Contractor will not discriminate against any applicant for employment because of race, creed, color, or national origin. The Contractor will take affirmative action to ensure that applicants are employed, and that employees are treated fairly during employment, without regard to their race, creed, color, or national origin. Such action shall include, but not be limited to, the following: employment, upgrading demotion or transfer; recruitment or recruitment compensation; and selection for training including apprenticeship. The Contractor agrees to post in conspicuous places, available to employees and applicants for employment, notices to be provided by the contracting officer setting forth the provisions of this nondiscrimination clause.

(2) The Contractor will, in all solicitations or advertisements for employees placed by or on behalf of the Contractor, state that all qualified applicants will receive consideration for employment without regard to race, creed, color, or national origin.

(3) The Contractor will send to each labor union or representative of workers with which he has a collective bargaining agreement or other contract or understanding, a notice, to be provided by the agency contracting officer, advising the labor union or workers' representative of the contractors' commitments under Section 202 of Executive Order No. 11246 of September 24, 1965, and shall post copies of the notice in conspicuous places available to employees and applicants for employment.

(4) The Contractor will comply with all provisions of Executive Order No. 11246 of September 24, 1965, and the rules, regulations, and relevant orders of the Secretary of Labor.

(5) The Contractor will furnish all information and reports required by Executive Order No. 11246 of September 24, 1965, and by the rules, regulations, and orders of the Secretary of Labor, or pursuant thereto, and will permit access to his books, records,

and accounts by the contracting agency and the Secretary of Labor for purposes of investigation to ascertain compliance with such rules, regulations, and orders.

(6) In the event of the Contractor's noncompliance with the nondiscrimination clauses of this contract or with any of such rules, regulations, or orders, this contract may be canceled, terminated, or suspended in whole or in part and the Contractor may be declared ineligible for further Government contracts in accordance with procedures authorized in Executive Order No. 11246 of September 24, 1965, and such other sanctions may be imposed and remedies involved as provided in Executive Order No. 11246 of September 24, 1965, or by rule, regulations, or order of the Secretary of Labor, or as otherwise provided by law.

(7) The Contractor will include the provisions of Paragraphs (1) through (7) in every subcontract or purchase order unless exempted by rules, regulations, or orders of the Secretary of Labor issued pursuant to Section 204 of Executive Order No. 11246 of September 24, 1965, so that such provisions will be binding upon each subcontractor or vendor. The Contractor will take such action with respect to any subcontract or purchase order as the contracting agency may direct as a means of enforcing such provisions including sanctions for noncompliance: Provided, however, that in the event the Contractor becomes involved in, or is threatened with, litigation with a subcontractor or vendor as a result of such direction by the contracting agency, the Contractor may request the United States to enter into such litigation to protect the interests of the United States.

ARTICLE VI

During the performance and up to the date of final acceptance, the Contractor shall be under an absolute obligation to protect any damage, loss or injury; and, in the event of such damage, loss or injury, he shall promptly replace or repair such work, whichever the (Engineer) shall determine to be preferable. The obligation to deliver finished work in strict accordance with the contract prior to final acceptance shall be absolute and shall not be affected by the (Engineer's) approval of or failure to prohibit means and methods of construction used by the Contractor.

The Contractor shall be responsible for maintenance and operation of all constructed facilities until final acceptance unless otherwise noted in specifications, notes, or special provisions. This includes locating of contractor constructed underground facilities.

The Contractor must take all reasonable precautions to protect the persons and property of others on or adjacent to the site from damage, loss, or injury resulting from his operations under this contract.

Within three days after notice to him of the happening of any such loss, damage, or injury, the Contractor shall make a full and complete report thereof in writing to the Engineer.

If the persons or property of others on or adjacent to the site sustain loss, damage or injury resulting directly or indirectly from the work of the Contractor, or his subcontractors, in their performance of this contract, or from his or their failure to comply with any of the provisions of this contract or of law, the Contractor shall indemnify and hold the City harmless from any and all claims and judgments for damage and from costs and expenses to which the City may be subjected or which it may suffer or incur by reason thereof.

The Contractor agrees to indemnify and save harmless the City of Bismarck, its appointed and elective officers and employees, from and against all loss or expense, including attorney's fees and costs by reason of liability imposed by law upon the City, its elected or appointed officials or employees for damages because of bodily injury including death at any time resulting therefrom sustained by any person or persons and on account of damage to property including loss of use thereof, arising out of or in consequence of the performance of this work, whether such injuries to persons or damage to property is due to the negligence of the Contractor, his agents or employees, his subcontractors, their employees, City of Bismarck, its appointed or elected officers, employees, or their agents, except only such injury or damage as shall have been occasioned by sole negligence of the City, its appointed or elected officials or employees.

The City may suspend or terminate the Agreement, in whole or in part, and suspend work at any time, re-let work to be completed, or order the reconstruction of any part or all of the work improperly done for improper construction or non-compliance with the terms of the agreement. The decision of the City upon any questions connected with the execution of this Agreement or any failure or delay in the prosecution of the work by the Contractor shall be final and conclusive.

Whenever the City determines to suspend or terminate any of the provisions of the Agreement or to suspend work, re-let work, or order the reconstruction of any part or all of the work, the City shall promptly notify the Contractor in writing of the determination and the reasons for the action, together with the effective date.

The Contractor shall give preference, pursuant to North Dakota Century Code Subsection 43-07-20, to the employment of bona fide North Dakota residents with preference given first to honorably discharged disabled veterans of the armed forces of the United States, who are deemed to be qualified in the performance of said work. Such preference shall not apply to engineering, superintendence, management, or office or clerical work. Contracts which involve federal aid funds and where a preference or discrimination would be contrary to federal law or regulations shall be exempt from the requirements of this paragraph.

The Contractor, in employing and maintaining labor, shall do so in conformity with state and federal law and this Agreement.

IN WITNESS WHEREOF, the parties hereto have caused this instrument to be executed as of the date and year first above written.

CITY OF BISMARCK
A Municipal Corporation

(SEAL)

_____
President, Board of City Commissioners

Attest: _____
City Administrator

_____
Date Signed

* * * *

SECTION 1402 - BID BOND

KNOW ALL MEN BY THESE PRESENTS, that we _____ _____, hereinafter called the Principal, as Principal, and the _____ _____ of _____, a corporation duly organized under the laws of the State of _____, hereinafter called the Surety, as Surety, are held or firmly bound unto _____ _____ _____, hereinafter called the Obligee, in the sum of _____ _____ Dollars ($_____), for the payment of which sum well and truly to be made, the said Principal and the said Surety, bind ourselves, our heirs, executors, administrators, successors, and assigns, jointly and severally, firmly by these presents.

NOW, THEREFORE, if the Obligee shall accept the bid of the Principal, and the Principal shall enter into a Contract with the Obligee in accordance with the terms of such bid, and give such bond or bonds as may be specified in the bidding of the Contract Documents with good and sufficient surety and material furnished in the prosecution thereof or in the event of the failure of the Principal to enter such contract and give such bond or bonds, if the Principal shall pay to the Obligee the difference not to exceed the penalty hereof between the amount specified in said bid, and such larger amount for which the Obligee may in good faith contract with another party to perform the work covered by said bid, then this obligation shall be null and void, otherwise to remain in full force and effect.

SIGNED AND SEALED THIS _____ day of _____, 20__.

In the presence of:

_____(Seal)
Principle

_____
Witness

_____
Title

_____
Witness

_____(Seal)
Surety

_____
North Dakota Agent

_____
Title

SECTION 1403 - PERFORMANCE BOND

KNOW ALL MEN BY THESE PRESENTS that _____
_____
(Here insert the name and address or legal title of the Contractor)

as Principal, hereinafter called the Contractor, and _____
_____
(Here insert the legal title of Surety)

as Surety, hereinafter called the Surety, are held and firmly bound unto _____
_____
(Here insert the name and address or legal title of the Owner)

as Obligee, hereinafter called the Owner, in the amount of _____
_____ Dollars ($_____) for the payment whereof the Contractor and the Surety bind themselves, their heirs, executors, administrators, successors and assigns, jointly and severally, firmly by these presents.

WHEREAS, the Contractor has by written agreement, dated _____, 20___, entered into a contract with the Owner for _____
_____
_____
Here insert full name and title)

which Contract is by reference made a part hereof, and is hereinafter referred to as the Contract.

NOW THEREFORE, THE CONDITION OF THIS OBLIGATION is such that, if the Contractor shall promptly and faithfully perform said Contract, then this obligation shall be null and void; otherwise it shall remain in full force and effect.

a) The Surety hereby waives notice of any alteration or extension of time made by the Owner.

b) Whenever the Contractor shall be and declared by the Owner to be in default under the Contract, the Owner having performed the Owner's obligations thereunder, the Surety may promptly remedy the default, or shall promptly

1) Complete the Contract in accordance with its terms and conditions, or

2) Obtain a bid or bids for submission to the Owner for completing the Contract in accordance with its terms and conditions, and upon determination by Owner and Surety of the lowest responsible bidder, arrange for a contract between such bidder and Owner, and make available as work progresses (even though there should be a default or a

succession of defaults under the contract or contracts of completion arranged under this paragraph) sufficient funds to pay the cost of completion less the balance of the Contract price, including others costs and damages for which the Surety may be liable hereunder, but not exceeding the amount set forth in the first paragraph hereof. The term "balance of the Contract price" as used in this paragraph shall mean the total amount payable by the Owner to the Contractor under the Contract and any amendments thereto, less the amount properly paid by the Owner to the Contractor.

c) Any suit under this bond must be instituted before the expiration of two (2) years from the date on which final payment under the Contract falls due.

d) No right of action shall accrue on this bond to or for the use of any person or corporation other than the Owner named herein or the heirs, executors, administrators or successors of the Owner.

SIGNED AND SEALED THIS _____ day of _____, 20___.

In the presence of:

_____(Seal)
Principle

_____
Witness

_____
Title

_____
Witness

_____(Seal)
Surety

_____
North Dakota Resident Agent

_____
Title

SECTION 1404 - PAYMENT BOND

KNOW ALL MEN: That we _____
_____
hereinafter called the Principal, and _____
_____
_____ and
_____
_____
_____ and
hereinafter called the Surety or Sureties, are held and firmly bound onto _____
_____
hereinafter called the Owners, and to such persons, firms and corporations who may furnish materials for, or perform labor on the work, building or improvements, contemplated in the contract hereinafter mentioned, in the sum of _____
_____
_____ Dollars ($_____) for the payment whereof the Principal and Surety, or Sureties, bind themselves, their heirs, executors, administrators, successors and assigns, jointly and severally, firmly by these presents.

WHEREAS, the Principal has by means of a written agreement dated _____ entered into a contract with the Owner for _____
_____
a copy of which Agreement is by reference made a part hereof.

NOW THEREFORE, the conditions of this obligation are such that if the Principal shall faithfully perform the Contract on his part, and satisfy all claims and demands incurred for the same and shall fully indemnify and save harmless the Owner from all costs and damage which he may suffer by reason of failure so to do and shall fully reimburse and repay the Owner all outlay and expense which the Owner may incur in making good any such default and shall promptly make payment to all persons supplying labor or material for use in the prosecution of the work provided for in such contract, then this obligation shall be null and void; otherwise, it shall remain in full force and effect.

AND PROVIDED, that any alterations which may be made in the terms of the Contract, or in the work to be done under it, or the giving by the Owner of any extension of time for the performance of the Contract or any other forbearance on the part of either the Owner or the Principal to the other shall not in any way release the Principal and the Surety, or Sureties, or either or any of them, their heirs, executors, administrators, successors or assigns from their liability hereunder, notice to Surety, or Sureties, of any alteration, extension or forbearance being hereby waived.

This bond is made for the use and benefit of all persons, firms and corporations who may furnish any material or perform any labor for or on account of said work, building or improvements and they and each of them are hereby made obligees hereunder the

same as if their own proper names were written herein as such, and they and each of them may sue hereon.

Signed and Sealed this _____ day of _____ 20__.

In the presence of:

_____	_____(Seal)
	as to
_____	_____
_____	_____(Seal)
	as to
_____	_____
_____	_____(Seal)
	as to
_____	_____

CITY OF BISMARCK ENGINEERING DEPARTMENT

Contract Progress Schedule

Project No. _____ **Original Contract Amount** _____

Proposed Start Date _____ **Proposed Completion Date** _____

Contractor _____

TENTATIVE WORK SCHEDULE

Major Work Elements	% of Contract Cost	Working Days																													% Comp
		5	10	15	20	25	30	35	40	45	50	55	60	65	70	75	80	85	90	95	0 0	5	10	15	20	25	30	35	40	45	
																															100
																															95
																															90
																															85
																															80
																															75
																															70
																															65
																															60
																															55
																															50
																															45
																															40
																															35
																															30
																															25
																															20
																															15
																															10
																															5
																															0

Approved By _____ **Date** _____

City Engineer

_____ **Date** _____

Contractor

CITY OF BISMARCK

EXTRA WORK ORDER

Work Order No._____ Date_____

Contractor_____ Project_____

_____ _____

_____ _____

You are hereby authorized to complete the following extra work in accordance with the specifications as directed by the Engineer.

Location and description of work:_____

_____

_____

Said extra work shall be paid for as stipulated below:

Unit Prices (list below) ____

Lump Sum (list below) ____

Force Account per Section 126
of General Provisions ____

_____

_____

_____

The following subcontractors are approved for this work order:_____

_____

Remarks_____

_____

Work Order Issued by_____ Title_____

Work Order Completed_____ Accepted by_____

Date_____

CITY OF BISMARCK ENGINEERING DEPARTMENT

Force Account Summary

Date _____ **Contractor** _____

Project No. _____ **Change Order No.** _____

Description of Work _____

_____

_____

Date of Work	Cost Plus Items (Attach Itemized Statements)		Equipment (Attach Itemized Statement)
	Labor	Material	
Subtotal	a	f	i

Labor (Contractor's Direct Costs) _____ **a** _____

20% of Labor (a) (Contractors Percentage) _____ **b** _____

% of Labor (a) for (Breakdown must be submitted to establish percentage) _____ **c** _____

6% of (c) _____ **d** _____

Other Labor Costs (Operator, Truck Driver, Union, Health, Welfare,etc.) _____ **e** _____

Total Labor Costs (a+b+c+d+e) _____ **f** _____

Materials (Contractor's Cost) _____ **g** _____

15% of (g) Materials Costs (excluding sales tax) _____ **h** _____

Total Materials Costs _____ **i** _____

Equipment _____ **j** _____

Total This Summary Sheet _____

CITY OF BISMARCK ENGINEERING DEPARTMENT

Extra Work - Labor

Date _____ **Contractor** _____

Project No. _____ **Force Acct. No.** _____

Description of Work _____

Employee's Name	Labor Classification & Number	Starting Time a.m.	Starting Time p.m.	Ending Time a.m.	Ending Time p.m.		Hours	Rates	Amount
						ST			
						OT			
						ST			
						OT			
						ST			
						OT			
						ST			
						OT			
						ST			
						OT			
						ST			
						OT			
						ST			
						OT			
						ST			
						OT			
						ST			
						OT			
						ST			
						OT			
						ST			
						OT			
	Total Labor								

I hereby certify that the above labor was used on force account work named in designated order, for the hours indicated. Hours and Rates of straight and over time will be completed later using the contractors payrolls, and those rates for labor will not exceed those for comparable labor currently employed on the project.

_____ _____

Inspector **Contractor's Representative**

CITY OF BISMARCK ENGINEERING DEPARTMENT

Extra Work - Equipment

Date _____ **Contractor** _____

Project No. _____ **Force Acct. No.** _____

Description of Work _____

Type and Capacity of Equipment	Starting Time a.m.	Starting Time p.m.	Ending Time a.m.	Ending Time p.m.	Hours	Rental Rate	Amount

I hereby certify that the equipment listed above was actually used on force account work named in designated order and for the hours indicated. Rental Rate and Amount shall be completed later using the Department Rental Rates.

_____ **Inspector**

_____ **Contractor's Representative**

CITY OF BISMARCK ENGINEERING DEPARTMENT

Extra Work - Materials

Date _____ **Contractor** _____

Project No. _____ **Force Acct. No.** _____

Description of Work _____

Item	Quantity	Unit	*Unit Price	*Amount
Sub-Total Cost of Materials				
Sales Tax				
Total Cost of Materials				

I hereby certify that the materials listed above were actually used on force account work named in designated order and that the unit price and amount shown represents the actual cost of materials as shown on a copy of contractor's certified invoices.

* To be completed after contractor has furnished a copy of the certified invoices.

_____ _____

Inspector **Contractor's Representative**

NORTH DAKOTA DEPARTMENT OF TRANSPORTATION
SPECIAL PROVISION

FUEL COST ADJUSTMENT CLAUSE

Revision Date: 9/8/2006

Introduction

This Special Provision provides for price adjustments to the Contract when significant changes in the cost of motor fuels and burner fuels occur while completing the Contract work. Participation in fuel cost adjustment program is not mandatory. A Contractor is not required to notify the Department at the time of submitting bids whether the Contractor will or will not participate in the fuel cost adjustment provision.

The North Dakota Department of Transportation (NDDOT) will send the low responsible bidder a "Fuel Cost Adjustment Affidavit" (SFN 58393) with the proposed Contract. The Contractor shall return a completed Fuel Adjustment Affidavit with the signed Contract as specified in Standard Specification Section 103.06, Execution and Approval of the Contract. The affidavit shall be returned on all Contracts with this provision even if the Contractor elects not to participate in the provision.

Compensation adjustments for motor fuels and burner fuels consumed in prosecuting the Contract shall be determined by the Engineer in accordance with the provisions set forth herein. Compensation adjustments will be assessed monthly for the cost of the motor fuels and burner fuels whenever the Current Fuel Index (CFI) is outside the given threshold of the Base Fuel Index (BFI) for the Contract.

If the Contractor has a fixed price for fuel for motor or burner fuels to complete the work, no fuel cost adjustments will be made for that fuel type. If there is no fixed fuel price for motor or burner fuels, participation in the Fuel Adjustment provision is the decision of the prime Contractor.

If the prime Contractor decides not to participate, no fuel cost adjustments will be made to the Contract for the Contractor or any subcontractors. If the prime Contractor elects to participate in the fuel cost adjustment provision, the prime Contractor shall include the anticipated fuel cost of subcontractors who wish to participate. If fuel cost adjustments are made to the Contract, the prime Contractor shall ensure that participating subcontractors including second and lower tier, are included in the adjustments in proportion to the percentage of work and anticipated fuel cost by that subcontractor.

Fuel Indexes

Each month, NDDOT will record the average wholesale price for No. 2 fuel oil (diesel) and the average wholesale price for unleaded gasoline (87 octane). The monthly average will be the average of the daily rack prices for the month as reported by DTN Energy for Fargo ND. Burner fuel index will be the No. 2 fuel oil index regardless of the type of burner fuel actually used.

The Base Fuel Index (BFI) price for motor fuels and burner fuel to be used in the Contract will be the average wholesale price for the month prior to the bid opening.

The Current Fuel Index (CFI) price for motor fuels and burner fuel to be used for each monthly adjustment will be the average wholesale price for the month prior to the adjustment month.

Fuel Ratio

For motor fuels diesel and unleaded gas, the fuel ratio of the Contract will be determined by dividing the Contractor's affidavit costs for each motor fuel by the original Contract amount.

For burner fuels, the fuel ratio of the contract will be determined by dividing the Contractor's affidavit cost for burner fuels by the original Contract amount of plant-mixed hot bituminous pavement paid by the ton. Asphalt cement, binders and other miscellaneous bituminous items shall not be included.

The fuel ratio of the contract for motor and burner fuels will remain the same throughout the length of the contract. The sum of the affidavit fuel costs shall not exceed 15% of the original Contract amount.

The fuel ratio for the three fuel types will be determined by the following equation:

$$\textbf{Fuel Ratio}_{(x, y, z)} = \textbf{Affidavit Cost}_{(x, y, z)} / \textbf{Original Contract Amount}_{(x, y, z)}$$

(x)	=	Motor Fuel (Diesel)
(y)	=	Motor Fuel (Unleaded)
(z)	=	Burner Fuel
Fuel Ratio$_{(x, y, z)}$	=	Fuel ratio of the contract for each respective fuel type
Affidavit Cost$_{(x, y, z)}$	=	Fuel costs from Fuel Adjustment Affidavit (SFN new#)
Original Contract Amount$_{(x, y)}$	=	Total of the original contract amount excluding lane rental, and Part B of the bid (when A+B bidding is used), if applicable.
Original Contract Amount$_{(z)}$	=	Total original contract amount for all hot bituminous pavement bid items combined, excluding bid items for asphalt cement, sawing and sealing joints, coring, etc. Only hot bituminous pavement bid items measured by the Ton will be included in the calculation.

Cost Change

The monthly change in fuel costs will be determined by the following equation:

$$\textbf{Cost Change}_{(x, y, z)} = (CFI_{(x, y, z)} - BFI_{(x, y, z)}) / BFI_{(x, y, z)}$$

(x)	=	Motor Fuel (Diesel)
(y)	=	Motor Fuel (Unleaded)
(z)	=	Burner Fuel
Cost Change$_{(x, y, z)}$	=	The relative change in the current CFI and the BFI for each fuel type
CFI$_{(x, y, z)}$	=	Current Fuel Index for each fuel type
BFI$_{(x, y)}$	=	Base Fuel Index for each fuel type

Contract Adjustments

Contract adjustments will be made for the cost of motor and burner fuels whenever the cost change exceeds a ±0.10 threshold. No fuel cost adjustment will be made for work done under liquidated damages. Adjustments will be determined for Motor Fuel (diesel), Motor Fuel (unleaded), and Burner Fuel (burner) separately and shall be computed on a monthly basis.

When the cost change is greater than 0.10, the rebate to the Contractor for each fuel type shall be computed according to the following formulas:

$$\mathbf{FCA_{(x,\,y,\,z)} = Fuel\ Ratio_{(x,\,y,\,z)} \times Estimate_{(x,\,y,\,z)} \times (\ Cost\ Change_{(x,\,y,\,z)} - 0.10\ )}$$

(x)	=	Motor Fuel (Diesel)
(y)	=	Motor Fuel (Unleaded)
(z)	=	Burner Fuel
$FCA_{(x,\,y,\,z)}$	=	Fuel Cost Adjustment for each of the fuel types
$Fuel\ Ratio_{(x,\,y,\,z)}$	=	Fuel Ratio for each of the fuel types
$Estimate_{(x,\,y)}$	=	The monthly total of work done on estimates issued in the current month excluding incentive or disincentive payments, pay factor adjustments and any work completed under liquidated damages.
$Estimate_{(z)}$	=	The monthly total of hot bituminous pavement work done on estimates issued in the current month, excluding bid items for asphalt cement, sawing and sealing joints, coring, etc. Only hot bituminous pavement bid items measured by the Ton will be included in the calculation. Hot bituminous pavement work completed under liquidated damages will not be included.
$Cost\ Change_{(x,\,y,\,z)}$	=	The monthly change in fuel costs for each of the fuel types

When the cost change is less than -0.10, the credit to the Department for each fuel type shall be computed according to the following formulas:

$$FCA_{(x, y, z)} = \text{Fuel Ratio}_{(x, y, z)} \times \text{Estimate}_{(x, y, z)} \times (\text{Cost Change}_{(x, y, z)} + 0.10)$$

(x)	=	Motor Fuel (Diesel)
(y)	=	Motor Fuel (Unleaded)
(z)	=	Burner Fuel
$FCA_{(x, y, z)}$	=	Fuel Cost Adjustment for each of the fuel types
$\text{Fuel Ratio}_{(x, y, z)}$	=	Fuel Ratio for each of the fuel types
$\text{Estimate}_{(x, y)}$	=	The monthly total of work done on estimates issued in the current month excluding any incentive or disincentive payments, pay factor adjustments and any work completed under liquidated damages.
$\text{Estimate}_{(z)}$	=	The monthly total of hot bituminous pavement work done on estimates issued in the current month, excluding bid items for asphalt cement, sawing and sealing joints, coring, etc. Only hot bituminous pavement bid items measured by the Ton will be included in the calculation. Hot bituminous pavement work completed under liquidated damages will not be included.
$\text{Cost Change}_{(x, y, z)}$	=	The monthly change in fuel costs for each of the fuel types

Payments

Adjustments will be determined by the Engineer monthly. Adjustments will be made under the following spec and code for each fuel type:

109 0100	Motor Fuels (Diesel)
109 0200	Motor Fuels (Unleaded)
109 0300	Burner Fuel

When significant payment adjustments are made on final estimates to account for final in-place measured quantities, the Engineer may prorate the adjustments back to the months when the work was done.

Attachments

For informational purposes, a 'Fuel Cost Adjustment Affidavit' (SFN 58393) is included as Attachment A.

S.P. FUEL COST ADJUSTMENT - MONTHLY

North Dakota Department of Transportation, Construction

SFN 17483 (Rev. 10-2000)

Project No.	Type
Contractor	Bid Opening Date

Total Fuel Requirements

Motor fuels (#2 Diesel and Gasoline)	gallons
Fuel for Heating and Drying (Burner Fuel/Used Oil)	gallons
Fuel for Heating and Drying (Propane/Natural Gas)	gallons

Base Price Index

Motor Fuels (#2 Diesel and Gasoline)	$ per gallon
Burner Fuel/Used Oil	$ per gallon
Propane/Natural Gas	$ per gallon

Fuel Compensation Adjustments: FCA = MFA x (AP-BP)

Where: FCA = Fuel costs adjustment for calendar Month.
MFA = Monthly fuel allocation (in gal.) = fuel allocation to date (-) fuel allocation on previous Monthly adjustments.
AP = Average rolling wholesale price for calendar month (established by Construction Office.)
BP = Base price index.
TFR = Total fuel requirement.
FRA = Percent of fuel requirement allocated.

Month ending:	Average price: Motor fuel	Heating Fuel
Percent of original contract amount earned to date:		FCA = TFR X FRA (AP - BP) FCA = _____
Percent of fuel adjustment from special provision:		FCA = _____

Month ending:	Average price: Motor fuel	Heating Fuel
Percent of original contract amount earned to date:		FCA = TFR X FRA (AP - BP) FCA = _____
Percent of fuel adjustment from special provision:		FCA = _____

Month ending:	Average price: Motor fuel	Heating Fuel
Percent of original contract amount earned to date:		FCA = TFR X FRA (AP - BP) FCA = _____
Percent of fuel adjustment from special provision:		FCA = _____

Month ending:	Average price: Motor fuel	Heating Fuel
Percent of original contract amount earned to date:		FCA = TFR X FRA (AP - BP) FCA = _____
Percent of fuel adjustment from special provision:		FCA = _____

Grand Total Adjustment: