# CONTRACT CHANGE ORDER FORM

## DEPARTMENT

Contract between the City of Bismarck and **PKG Contracting, INC.**

Contract Number: **2015-58** Change Order Number: **G-4**

Project/Subproject: **SANSWRUTIL.TFILTERS.DESIGNCONST**

Original Contract Amt: **$16,469,000**

Project Description: **Bismarck WWTP Trickling Filters – General Construction**

Previous Contract Amount:**$16,505,475**

Change Order Amount: **$0**

Original Contract Date: **July 15, 2017** Change in Contract Timeline: **July 16, 2017**

Within Project Scope: Y / N* Within Project Funding: Y / N**

**If not within project scope, attach description of change in scope for Board approval.*

***If not within project funding, attach revised Project Budget for Board approval.*

Type of Change Order

_____ Non Design-related Change Order: These change orders include unforeseen conditions, code-related issues, and building inspector changes.

___x__ Design-related Change Order: These change orders include unforeseen conditions that affect the appearance, layout, functionality, dimensions, and/or quality of the project.

_____ Emergency Field Condition Change Orders: These change orders include any condition that causes an emergency situation where safety or other immediate losses may occur.

_____ Other: (describe) _____

Project Manager Signature: (<$15,000) _____ Date

Department Head Signature:(<$25,000) Michelle Klose 6/8/16 Date

## ADMINISTRATION

City Administrator Signature: (<$50,000) _____ Date

Add to Commission Consent Agenda

## COMMISSION APPROVAL

Commission Approval Date:_____

Attach minutes for Commission Approval

## FISCAL

Comments: _____

Signature Date Completed

**TO ALL DEPARTMENTS:** Please attach a copy of the change order

# Change Order

**No. G-04**

Date of Issuance: June 3, 2016 | Effective Date: June 3, 2016

| | | | |
|---|---|---|---|
| Project: *Bismarck WWTF - Trickling Filter Improvements* | Owner: *City of Bismarck, ND* | Owner's Contract No.: | |
| Contract: *General Construction* | | Date of Contract: | August 28, 2015 |
| Contractor: *PKG Contracting, Inc.* | | Engineer's Project No.: | P00501-2007-017-060 |

**The Contract Documents are modified as follows upon execution of this Change Order:**

**Description of Change**

At the request of the Phase I general construction bidders, the completion dates of the Phase I construction contract were pushed back 5 months. Intended delivery of Phase I Trickling Filter Media was originally 7/1/16, which no longer matches the needs of the Phase I general contractor. This change order modifies the delivery date of Trickling Filter media to match the needs of the Phase I general contractor, moving the delivery date for phase I media from 7/1/16, to 10/31/16.

Due to the postponement of media delivery and the additional handling and storage costs this places unto the media suppler, ENEXIO, at the request of ENEXIO, as part of a separate change order, they have proposed an alternate media support system to assist them in covering the aforementioned additional costs. As part of this change, PKG has agreed to, and is directed to install the alternate media support system at no additional cost to the Owner. For details of the alternate support system, refer to Exhibit B.

| Item | Description | Cost Adjustment |
|---|---|---|
| 1 | *Modify Trickling Filter Media Delivery Schedule -- See attached Exhibit A* | *$0.00* |
| 2 | *Installation of Alternate Trickling Filter Media Support System -- See attached Exhibit B* | *$0.00* |
| | Total Net Change - CO G-04 | ***$0.00*** |

Attachments: Exhibit A, Exhibit B

**CHANGE IN CONTRACT PRICE:**

Original Contract Price:

$ *16,469,000.00*

Increase from previously approved Change Orders

No. 0 to No. 2:

*$36,475.00*

Contract with Increase from previously approved Change Orders

$ $ *16,505,475.00*

Increase of this Change Order

$ *$0.00*

Contract Price incorporating this Change Order:

$ $ *16,505,475.00*

**CHANGE IN CONTRACT TIMES:**

Original Contract Times: ☐ Working days ☐ Calendar days

Substantial completion (days or date): May 31, 2017

Ready for final payment (days or date): July 15, 2017

Increase from previously approved Change Orders No. 0 to No. 1:

Substantial completion (days): 1

Ready for final payment (days): 1

Contract Times prior to this Change Order:

Substantial completion (days or date): June 1, 2017

Ready for final payment (days or date): July 16, 2017

[Increase] [Decrease] Time of this Change Order:

Substantial completion (days or date): 0

Ready for final payment (days or date): 0

Contract Times with all approved Change Orders:

Substantial completion (days or date): June 1, 2017

Ready for final payment (days or date): July 16, 2017

RECOMMENDED:

By: Lisa Austin

Engineer (Authorized Signature)

Date: 6/3/2016

ACCEPTED:

By:

Owner (Authorized Signature)

Date:

ACCEPTED:

By:

Contractor (Authorized Signature)

Date: 6-7-16

Approved by Funding Agency (if applicable):

Date:



Prepared by the Engineers' Joint Contract Documents Committee and endorsed by the Associated General Contractors of America and the Construction Specifications Institute.

## CHANGE ORDER CO-G-04 — EXHIBIT A

At the request of the Phase I general construction bidders, the completion dates of the Phase I construction contract were pushed back 5 months. Intended delivery of Phase I Trickling Filter Media was originally 7/1/16, which no longer matches the needs of the Phase I general contractor. This change order modifies the delivery date of Trickling Filter media to match the needs of the Phase I general contractor.

This change order modifies the delivery date of Trickling Filter media only. Current contract completion dates are unaffected. The modified delivery date of Trickling Filter media is as follows:

1. **Original Date:** Phase I Trickling Filter Media Delivery (Trickling Filter #3) – July 1, 2016
   a. **Revised Date:** October 31, 2016

## CHANGE ORDER CO-G-04 — EXHIBIT B

Due to the postponement of media delivery and the additional handling and storage costs this places unto the media suppler, ENEXIO, at the request of ENEXIO, as part of a separate change order, they have proposed an alternate media support system to assist them in covering the aforementioned additional costs. As part of this change, PKG has agreed to, and is directed to install the alternate media support system at no additional cost to the Owner.

In lieu of the originally specified, submitted, and approved polypropylene PIERdek/Buzon pedestal supports, the media supplier, ENEXIO, will be providing an alternate support system, consisting of pedestals that combine PVC stanchions and slope correcting base plates. The pedestals will support FRP beams and pultruded FRP grating, that will be held down by stainless steel hardware. Details for this system, including installation instructions, can be found in the attached Exhibit B-1. All fastening and misc. hardware to be stainless steel, glass-reinforced ABS, or PVC.

**Attachments:**

- Exhibit B-1: BIOdek Support System Details

GEA HEAT EXCHANGERS

CO-G-04 -- Exhibit B-1 -- BIOdek Support System Details

# 2H BIOdek®

## Installation Handbook

## For Trickling Filter No 3
## Bismarck, ND

Part II – Support structure

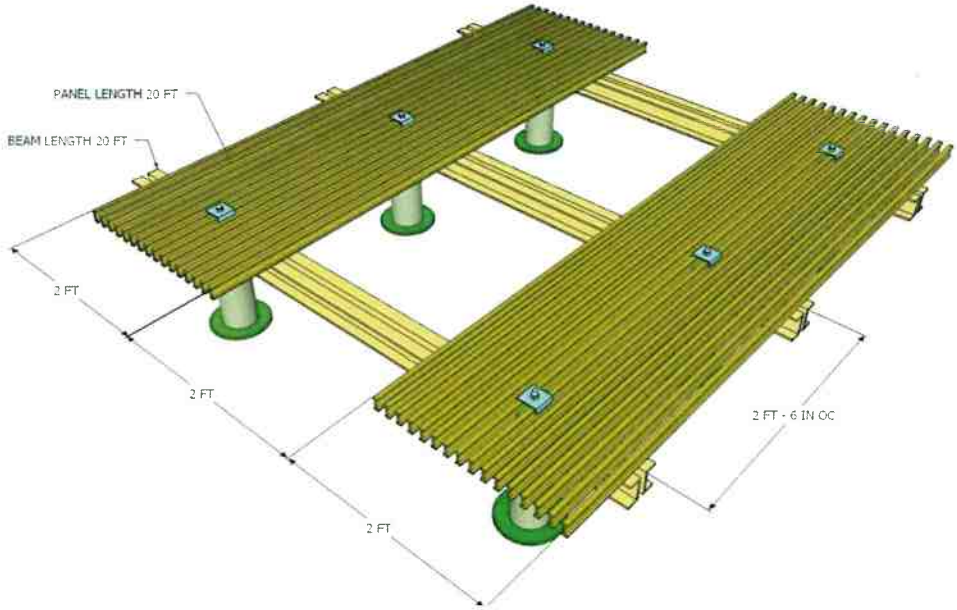

# Table of Contents

Section 1 Support Structure Components

1.1 Delivery
1.2 Unloading

Section 2 Storage & Installation Instructions for PIERdek Structure

2.1 Storage
2.2 Preparation of Work
2.3 Requirements of Workers
2.4 Structure Installation
    2.4.1 Center Channel
    2.4.2 Perimeter Gratings
    2.4.3 Inner Gratings

Section 3 Anchoring of PIERdek Piers

Support structure components

Following items will be delivered to set-up the support structure

*Table 1: Scope of delivery*

| ITEM | Pcs | Discription | |
|---|---|---|---|
| 1 | | PVC pipe 4' schedule 40, length 20' | |
| 2 | | Pultruded grating 20' x 2'<br><br>Pultruded grating 20' x 1' | |
| 3 | | FRP beams 20' , channel type | |
| 4 | | Slope corrector discs for slope adjustment 0% - 4% | |
| 5 | | Base flange to be glued to PVC pipe | |
| 6 | | Top disc to be glued to PVC pipe after field cutting | |
| 7 | | Fixing sets<br>• 1 bolt with 2 nuts<br>• 1 lower bracket (SS)<br>• 1 middle bracket (PVC)<br>• 1 upper bracket (SS) | 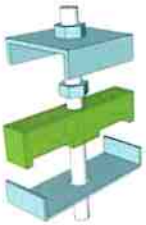 |

### 1.1 Delivery

Support structure components are delivered on pallets or crates. The support structure components are delivered a minimum of 2 weeks before the fill media to allow sufficient time for installation prior to fill media installation.

### 1.2 Unloading

The pallets and or crates must be moved to the back of the truck by a pallet jack suitable to move pallets. From the back of of the truck, the pallets must be lifted by some sort of a forklift and lowered to the ground.

After unloading the support structure components can be stored or conveyed directly into the filter for installation, see storage and/or installation instructions for details

Unloaded material shall be controlled and checked for the following:

- Do the delivered components and quantities match with the packing list?
- Are there damages?
- Are there other significant observations?

If any of these questions are answered with "YES" , an immediate report shall be issued to GEA with details and photos.

## 1 Storage Instructions for PIERdek Components

### 1.1 Storage

PIERdek support structure components can be stored as delivered without further protection.

### 1.2 Preparation work

The site engineer is to ensure that the filter floor is clean and clear of all construction debris prior to start of media installation.
The site engineer is to ensure that the as-build dimensions match with the contruction drawings. Following dimensions are of most importance and were used for support structure design

- Diameter 136 ft
- Max elevation from filter floor to the support level shall be 2'-3". (Center channel area)
- Min elevation at the perimeter at max distance from channel 1'-4 3/8"
- Slope should be even bend-penny shaped
- The edge of the center channel shall be even and without increased slope

Please report any divergances immediately to GEA , since a re adjustment of design components and/or support structure component quantities may become necessary.

### 2.3 Requirements to workers

All support structure installations works in the filter is to be undertaken by trained installers or under supervision of 2H until the installers are trained enough. A specific skill is not mandatory.

The installers must be instructed about all applicable safety instructions.

## 2.4 Support Structure Installation

This section refers to the proposed order of installation. A separate instruction is provided for the installation slope adjustment of the piers. These separate instructions shall be followed.

### Step 1: Grit markings

The position of the stanchions shall be marked in accordance with the grit-scheme. For the Bismarck-Trickling filters the position grit is 4' by 2'-6' . Since the center channel width is 27", it can be spanned with the 4' distance, when the positions are marked 10-1/2" away from the channel edge.

The installation should start at the center line of the filter perpendicular to the channel.

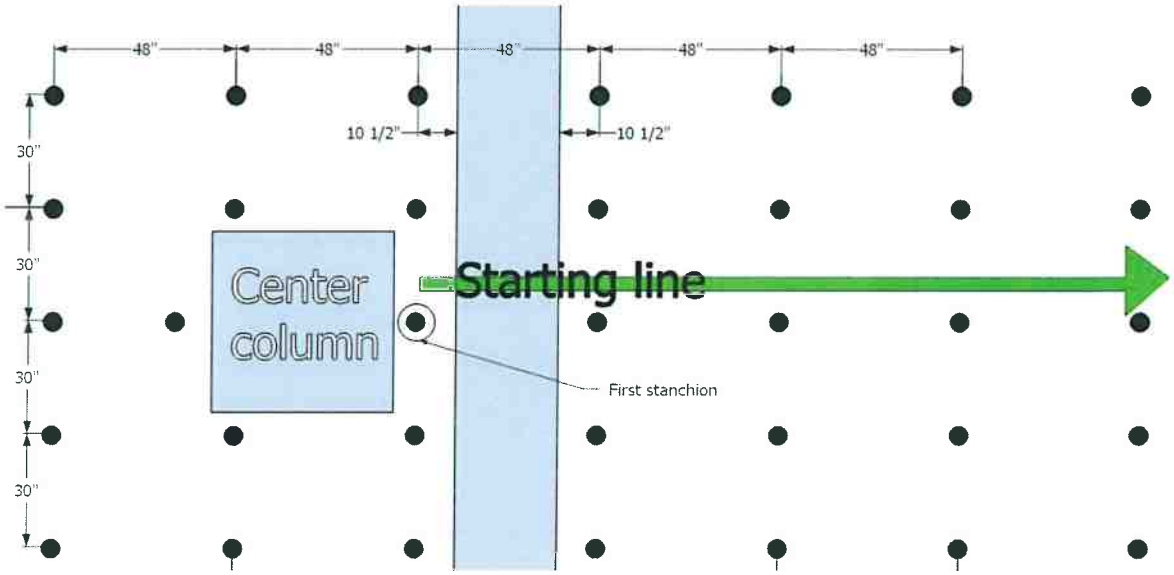


Once the positions are properly marked, the slope corrector plates shall be placed on its assigned positions. Don't anchor at this step!

### Step 2: Pipe cutting

Cut the PVC pipes to length, if the measure can be clearly defined. Cut the pipes with some extra length, if not. In the second case the pipe need a second cut to gain the correct length.

Note: the pipe itself shall be 138 mm (5-7/16") shorter than the measure from the floor to the upper side of the grating. The max length from floor to upper side of the grating can be found along the channel. Its 2'-8 5/8", thus the PVC pipe need to be ~2'-3 3/16"

### Step 3: Gluing the base

Glue the PVC base flange ( Item 5) into the inner side of the pipe and place the pipe with the base onto the slope corrector

Step 3: Doublecheck the stanchion height

Doublecheck the stanchion height and re-adjust if necessary. All stanchions should have the same level on the upper side

Step 4: Glue the upper disc

Glue the upper disc with the thread into the inner part of the pipe. The disc and the upper pipe-cut shall be at the same level.

Step 5: Start installation of the FRP beams

Screw the bolts (part of the fixing set) into thread of the disc , let ~140mm (5-1/2") out.

Push the lower bracket of the fixing sets over the bolt with the folds reaching upwards.

Place a pair of 20ft FRP beams on the lower bracket over 5 stanchions. The ends of the beams shall be in the middle between two stanchions. Place the pairs in a staggered mode

Whenever a row reaches the wall an additional stanchion shall be mounted close to the wall, when the distance of the last regular stanchion to the wall is less then 1'-6"

Step 5: Tighten the FRP beams

Place the PVC block bracket upon the beam and tighten with a nut. The PVC bracket acts as a guide for the second grating and shall be perpendicular to the FRP beams.

After the entire beam is mounted, the row shall be doublechecked for its position and realigned if neccessay. Every 5$^{th}$ Base-plates shall be anchored to the floor. Don't anchor stanchions close to the wall at this point, since the might be re-aligned when the perimeter grating is to be placed

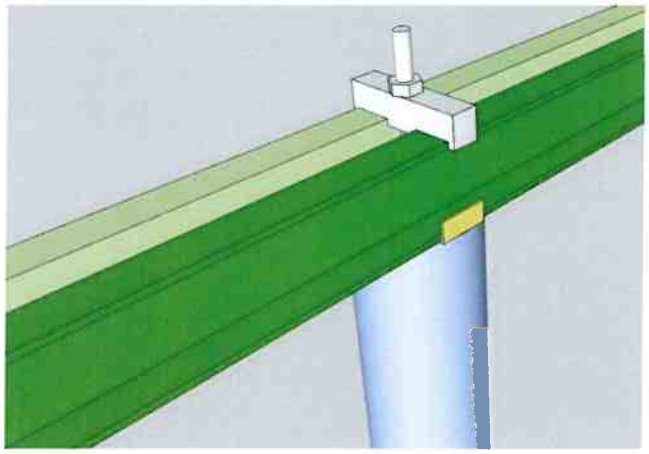

Repeat Step 1 to 5 with the parallel beam rows

Step 6: Layout of the perimeter grating

Perimeter grating is 1ft width and shall be placed over the the FRP beams along the perimeter. Follow the installation drawing for positioning.

Since the perimeter grating isn't perpendicular to the FRP beams, the middle PVC block bracket cannot be used in the fashion. Whereever this bracket serves as as guide to interlock with the pultruded grating, the block has to be turned upside-down to allow rotation .

Step 7: Layout of the inner grating

The inner grating is placed over 9 FRP supports. The ends of two adjacent gratings shall meet in the middle of the FRP beam pair.

Gratings shall be placed in a staggered fashion for best results in structural integrity. Whereever a grating meets the wall – the perimeter grating, it shall be field cut to fit.
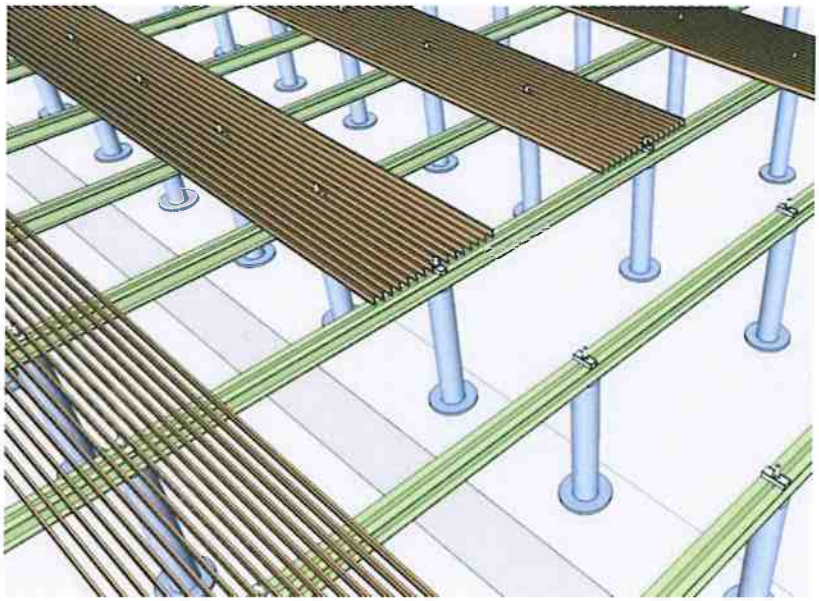
The pultruded grating are clamped to the stanchion screw the upper steel bracket